W E S T I N G H O U S E

TYPE RR-1 AND RR-1A REGISTER REGULATORS

INSTALLATION, OPERATION AND MAINTENANCE

INSTRUCTION BOOK 5670-10

WESTINGHOUSE ELECTRIC AND MANUFACTURING COMPANY

EAST PITTSBURGH WORKS, EAST PITTSBURGH, PA.

INDEX

W E S T I N G H O U S E

TYPE RR-1 AND RR-1A REGISTER REGULATORS

GENERAL APPLICATION

1. The RR-1 register regulator is a photo-electric device which will operate on a momentary change in light intensity. When this occurs, the KU-627 Grid-Glow tube breaks down and energizes an auxiliary control relay or control solenoid. This auxiliary control device will remain energized until the KU-627 anode circuit is interrupted by a cam switch or by some other auxiliary control equipment. The RR-1A register regulator is identical to the RR-1 except that a relay is included as part of the equipment.

The register regulators may be applied to a variety of control applications where it is desirable to operate on variations in light intensity of a duration of 1/5000 second or more. A typical example of such an application is shown in attached diagram Fig. 1 which shows the RR-1 Regulator applied for the control of register cutting of cellophane or other material. In this particular scheme, a rotary limit switch is arranged to interrupt the KU-627 plate current after breakdown has occurred. A spot printed on the material, or a hole punched in the material may be used as the photo-electric indicating means, while the synchronous selector connected to the cutter shaft is applied to register the photo-tube impulse with the position of the cutter.

GENERAL DESCRIPTION

2. The register regulator is mounted in a steel cabinet as shown in Fig. 2. The equipment consists of two separate units; namely the control cabinet and the voltage regulator. The voltage regulator which is assembled to the bottom of the control cabinet need not be applied if the A-C. supply voltage remains within the limits specified in paragraph 12.

PRINCIPLE OF OPERATION

3. As shown in drawing Fig. 1, the photo tube may be connected either between the grid terminal of the RJ-550 tube marked 31 on the diagram, and lead 28, or between lead 31 and lead 18. In the first case the photo tube switch should be in the "dark" position, in the second case the switch should be in the "light" position. When the switch is in the "dark" position

PRINCIPLE OF OPERATION (Continued)

the grid voltage of the RJ-550 tube will become more negative if the illumination on the photo cell is decreased. This will decrease the amount of current flowing through the RJ-550 tube, and, provided circuit 9-10 is closed the grid voltage of the KU-627 tube will be sufficiently positive to cause the KU-627 to break down. If the switch is in the "light" position, operation of the KU-627 tube is obtained if the intensity of photo-tube illuminatior is increased.

APPLICATION DATA

4. A-C. Voltage Supply

The equipment should be operated from an A-C. source with frequency as given on name plate. If no voltage regulator is applied, the voltage of the a-c. supply should not vary beyond a range of 106 volts and 118 volts, if connection is made to terminal 12 of the transformer, and should not vary beyond 111 and 123 volts if connection is made to terminal 3. As outlined later in paragraphs 12, it may be necessary to use the voltage regulator. In that case the a-c. supply voltage may vary between 100 volts and 130 volts without affecting the operation of the register regulator. It should be noted that the voltage regulator which operates on the tuned circuit principle necessarily has a frequency error as shown in the curves of fig. 3. From Fig. 3 may be seen that the regulator output voltage remains practically constant when the a-c. line voltage is varied from 100 volts to 130 volts provided the frequency remains constant. Although the frequency of most power systems remains within a $\pm$ 1/10 cycle zone, it is recommended that definit information regarding possible frequency variations be obtained if applications requiring close voltage regulation are contemplated. When no voltage regulator is used the current in lead 1 of Fig. 1 is 1.5 amperes, if maximum load current 0.5 amperes d-c. is applied in circuit 7-13. The maximum load is, therefore, 170 volt amperes. If the voltage regulator is applied the current in lead 1 is approximately 3.5 amperes, at 115 volts a-c. line voltage. This increase in line current is due to the regulator losses. In order to improve the supply voltage regulation and thus eliminate the voltage regulator, it is recommended that separate wires be run from the switchboard to the register regulator. If a lighting circuit is used as the power supply, the line voltage should be measured with and without the lighting load on the circuit to make sure that excessive voltage variations will not be obtained.

5. Load Characteristic

The load characteristic of the RR-1 Register Regulator is shown in Fig. 4. At zero load, the voltage across terminals

5. Load Characteristic (Continued)

7 and 13 of Fig. 1 is approximately 155 volts. This is, therefore, the anode voltage of the KU-627 tube before breakdown. A slight load, for example, a d-c. voltmeter will drop the voltage; and, for increasing load current, the load voltage will decrease as shown in Fig. 4. The curve in Fig. 4 was obtained with pure resistance load. If an inductive load is applied, it will be found that the load voltage will be slightly higher than given in Fig. 4. To prevent breakdown of the KU-627 tube due to induced voltage, a rectifier should be connected across the load terminals as shown in Fig. 1, if the load circuit is highly inductive. Rectox Rectifier Style number 716 189 is recommended for this purpose. The RR-1A register regulator shown in Fig. 5 is equipped with a telephone relay whose contacts open when the KU-627 tube breaks down. The capacity of the relay contacts is 0.5 ampere at 125 volts A-C. and 0.25 ampere at 125 volts D-c. If D-C. is used and the inductance of the load circuit is high, a 1 MF Condenser should be connected in parallel with the load. It should be noted that the maximum voltage across terminals 15 and 16 of Fig. 5 must not exceed 125 volts, because a higher voltage might cause flashover between the relay contacts.

6. Arrangement of Selector Switches

The arrangement of the limit or selector switches depends upon the type of application. In Fig. 1 is shown the arrangement for the control of register on a paper cutter. The spot on the paper is here synchronized with the selector switch connected in series with the brake coil. The paper should be arranged to travel slightly too fast so that the paper will tend to advance relative to the cutter. If the paper is thus advanced, the spot printed on the paper will reach a position when the beam of light projected on the photo tube is intercepted by the spot while the selector switch is conducting. This will cause the KU-627 tube to break down and energize the brake coil. The application of braking power retards the paper relative to the cutter so that the next time a spot intercepts the light beam, the selector switch will not be conductive. The selector switch should, as shown in Fig. 1, be connected to the cutter shaft so that the selector makes one revolution for each revolution of the cutter. The selector switch should be designed so that the KU-627 anode circuit will be opened at least 1/10 sec. during each revolution, so as to permit the gas in the tube to deionize. Assuming an open selector circuit during 1/10 sec. of each revolution it is apparent that the percentage time of brake operation will decrease with increasing cutter speed. This condition should be considered in applying the scheme shown in Fig. 1. If the speed of the cutter is so high that the brake would not remain energized during a period sufficiently long to obtain the required action, it may be necessary to use an arrangement as shown in Fig. 5. It should be noted that the external connections shown in Fig. 5 can be used with the RR-1 regulator shown in Fig. 1.

6. Arrangement of Selector Switches (Continued)

In Fig. 5 the timing is obtained by a selector switch connected to terminals 9 and 10. The KU-627 anode circuit is interrupted by an auxiliary relay or other contact device. If for example a brake coil is used to control the paper speed, a time delay relay may be arranged to be energized simultaneously with the brake coil. After a definite time interval this relay would operate, and deenergize the KU-627 tube. The arrangement shown in Fig. 5 is particularly useful in applications where the KU-627 tube is used to operate a trigger or a latch which initiates a definite control operation. In this case, frequently a mechanical switch can be arranged to deenergize the KU-627 tube after the control operation has been completed.

It is essential, particularly if the selector is connected to terminals 9 and 10, that the insulating resistance of the selector be high. Special selector switches having an insulating resistance in excess of 15 million ohms have been developed and should be used. One type of selector Style No. 850 641 is shown in Fig. 6 and Fig. 7. This selector is a self contained unit and is arranged so that the position of the brushes relative to the selector shaft may be adjusted. This permits easy readjustment of the position of the cut while the paper cutter is in operation. If it is preferred to build the selector as an integral part of the machine, a selector as shown in Fig. 8 may be used. This selector consists of two cams, and two brushholders with brushes. The cams, as well as the brushholders are unmounted. In assembling these parts arrangements should be made so that the position of the brushes relative to the cams may be easily changed so as to permit readjustment of the position of the cut.

The selector per Fig. 6 is designed primarily for two-directional control and for this reason has three cams and three brushes. This selector is essentially a two pole switch. The center brush engages a bronze cam which is conducting over the entire circumference. The two outer brushes engage cams which have a 30 deg. section and a 330 deg. section. The two outer cams may be adjusted 50 deg. in relation to each other, and either the 30 deg. section or the 330 deg. section of each cam may be electrically connected to the center cam. By connecting the two outer brushes in parallel, it is therefore possible to arrange the selector so that the conductive section may be varied from zero deg. to 360 deg.

If the register regulator is connected so that the KU-627 tube will break down if the illumination on the phototube is increased, the mechanical selector may be omitted and a photo-electric selector may be used. This photo-electric selector consists of a slotted disc which whould be operated by the cutter. A photo tube and a light source should be arranged

6. Arrangement of Selector Switches (Continued)

so that the slotted disc will intercept the beam of light impinging on the photo tube. Terminals 9 and 10 of Fig. 5 should be short circuited, and the selector photo-tube should be connected in series with the photo-tube shown in Fig. 5. The selector photo tube will be conducting only so long as the slotted disc permits the photo tube to be illuminated, and only during this period is it possible to cause KU-627 tube breakdown. It should be noted that this photo-electric selector is not applicable if the register regulator is connected for "dark" spot operation.

7. Reflected or Transmitted Light

The register regulators may be operated from light either transmitted through a material or from light reflected from a material.

When the register regulator is applied to exclusively control the register of cellophane or glassine paper, it is recommended to use a transmitted light scheme. If both cellophane and ordinary opaque paper is used on the same machine, a reflected light scheme is recommended. In order to use the reflected light scheme in connection with cellophane, a dark spot should be printed on the cellophane, and the cellophane sheet should be arranged to slide on top of a polished chromium plated plate so that ample reflection of the light is obtained when the printed spot does not intercept the light beam. It should be borne in mind that the sensitivity of the regulator is higher if transmitted light is used, provided the opacity of the paper does not exceed 60 percent. The opacity of the paper is defined so that the opacity is zero if all the light impinging on the paper is transmitted through it. If no light is transmitted through the paper, the opacity is 100 percent.

8. Color of Spot

In reflected light applications it is essential that care be exercised in selecting the color of the indicating spot. Since the color sensitivity of the photo tube is not equivalent to the color sensitivity of the human eye it will frequently be found that no photo tube response is obtained from a spot even though considerable contrast is apparent between the spot and the paper when viewed with the eye. It is recommended to use a black, dark blue or dark green spot, if the paper color is light and to connect for "dark spot" operation. If the color of the paper is dark blue, black, grey or green; a light yellow, white or red spot may be used. In that case the regulator should be connected for "light spot" operation. The glossiness of the spot affects the photo tube response to some extent, so that increased glossiness tends to increase the response from the photo tube.

8. Color of Spot (Continued)

For this reason it is desirable to print the spot with ink to give minimum glossiness if the equipment operates from a dark spot on a light colored paper, and to arrange a glossy spot if the photo tube is connected to operate from a light colored spot on a dark colored paper.

In attached color chart, Fig. 9, the different colors are so arranged that the vertical distance between any two colors is a measure of the response which will be obtained if these two colors are used as spot and paper color respectively, for either dark spot operation or light spot operation. Any two colors which in attached chart are spaced more than 4 inches apart may be used. If color combinations which are spaced less than 4 inches apart are chosen, paragraph 12 should be consulted in respect to limitations in maximum paper speed and A-C. line voltage variations.

In transmitted light applications the color of the spot is not of any consequence so long as the spot is more opaque than the paper.

9. Size and Position of Printed Spot

The dimensions of the spot printed on the paper depends upon the type of scanner which is applied. The width of the spot, in the direction of travel of the paper should be approximately 1/16 inch wider than the beam of light when a scanner for reflected light is applied, the spot should be 1/32 inch wider than the aperture in the photo-tube housing. The length of the spot should be equal to the length of the light beam, respective the length of the aperture slot, plus 1/8 inch plus the maximum possible sideways travel of the paper which may be experienced during the operation of the machine. For dimensions of light spot and aperture see paragraph 11. The position of the printed spot should be such that there is no other printing between successive spots, unless the selectors are arranged so that this additional printing will be cancelled.

10. Sensitivity

The sensitivity of the register regulator is ± 1/16 inch or better, i.e., the equipment will operate if the paper moves 1/16" off the neutral position. This however, does not mean that it is always possible to regulate the position of the paper within ± 1/16 inch, since the regulating qualities to a large extent depend upon the design and mechanical characteristic of the cutter.

11. Scanners

For reflected light application two different types of scanners are available; namely the type E and the type F.

11. Scanners (Continued)

Type E

The type E Scanner which is shown in Fig. 10 is an exceptionally compact device which gives a light spot approximately 3/32 inch wide and 1/8 inch long. The scanner has a photo-phone lamp Style No. 856 455 which is rated 10 volts, so that the lamp may be connected across terminals 4 and 6 on the regulator.

Type F

The type F scanner as shown in Fig. 11 employs the same lamp as the type E scanner, namely Style No. 856 455. The dimensions of the light spot are 1/8" wide x 1/4" long.

For transmitted light applications the type D photo tube housing shown in Fig. 12 and the type J light source shown in Fig. 13 may be used. The type J light source is equipped with a 6 volt lamp Style No. 849 085 and this lamp should be connected to terminals 5 and 6 of the regulator.

12. Paper Speed

(a) Reflected Light Application. Type E or F Scanner

The maximum paper speed for reflected light applications is 500 feet per minute provided the distance between the paper color and spot color, as shown in the color chart, is 4 inches or more. Under these conditions satisfactory operation will be obtained provided the a-c. line voltage does not vary more than ± 5 per cent. In the further discussion of the maximum paper speed the distance between two colors in the color chart will be referred to as the "Color -differential". If the maximum paper speed does not exceed 250 feet per minute a color-differential of 3 inches may be applied provided the a-c. line voltage does not vary more than ± 4 per cent from normal. If the maximum paper speed does not exceed 100 feet per minute a color-differential of 2.5 inches may be used, provided the a-c. line voltage does not vary more than ± 3 per cent from normal. In line with the foregoing, the application data for reflected light applications are shown in Fig. 1 of curve sheet Fig. 14 attached to this instruction book. It should be noted that these application curves are based on a maximum length of phototube leads of 6 feet. Applications involving longer phototube leads should be referred to the nearest Westinghouse District Office for information about maximum operating speed.

12. Paper Speed (Continued)

(b) Transmitted Light Application

(1) Cellophane Application

The maximum paper speed depends upon the opacity of the spot, and the maximum variations in a-c. supply voltage. The opacity of the spot is defined so that the opacity is 100 if no light is transmitted through the spot to the photo tube. If 50 percent of the light is transmitted through the photo tube the opacity is 50 percent. Application data for cellophane are shown in Fig. 2 of curve sheet Fig. 14. These curves give the maximum paper speed as a function of the opacity of the spot and the variations in line voltage.

(2) Paper Applications

When paper is used in transmitted light applications the application data given for cellophane apply, except that the difference between the paper opacity and the spot opacity should be used in the opacity column. If, for example, the spot opacity is 90 and the paper opacity is 40, the difference 50 should be used. If operation is obtained from a hole punched in the paper, the opacity of the spot is zero and the opacity of the paper may, therefore, be used to determine the maximum paper speed.

13. Temperature Effect

If the ambient temperature of the regulator is lower than 60°F. it may be found that several minutes will be needed before the KU-627 tube reaches normal operating temperature. If this delay is objectionable a 2-3/4" I.D. x 2-7/8" O.D. x 6" long Micarta tube may be placed around the KU-627 tube. This tube which is only supplied with the register regulator if specially ordered has four 1/2" diameter ventilating holes located 1" from the bottom of the tube, and 4 ventilating holes located 1" from the top of the tube. It should be noted that this tube must never be used if the ambient temperature exceeds 70°F.

INSTALLATION

NOTE: BEFORE INSTALLING THIS EQUIPMENT READ PARAGRAPHS 4 TO 13 OF THESE INSTRUCTIONS

14. Control Cabinet

Unpack the control cabinet carefully and mount in a position so that the equipment is not subject to excessive vibration. The equipment should not be used in installations where the ambient temperature exceeds 135°F, and if mounted near an open furnace, should be shielded against the heat rays. When a voltage regulator is used with the equipment, connect the a-c. supply circuit as shown in Fig. 1 and Fig. 5. If the voltage regulator is not used connect "B" to "C". Be sure to ground terminal 14.

15. Scanners Type E and Type F

If the type F scanner Fig. 11, is used the scanner should be mounted so that the paper slides directly on the bottom plate of the scanner. If the type E scanner, Fig. 10, is used the paper should be arranged to slide on a plate or similar support, and the scanner should be mounted so that the lower end of the scanner is 1/8 inch above the paper. IT SHOULD BE NOTED THAT UNDER NO CIRCUMSTANCES SHOULD THE BASE OF THE LAMP BE HIGHER THAN THE FILAMENT. THIS REQUIREMENT MUST BE CONSIDERED IN MOUNTING THE SCANNER.

Connections between the lamp and terminals 4 and 6 of the control cabinet should be made by the cable supplied with the scanner. Connections between the photo-tube and terminals X and Y of the control cabinet should be made by means of the special high tension Cable (No. 16. General Cable Corporation Spec. No. 250) supplied with the Scanner. The photo-tube leads should be run in a conduit, which should be grounded. There must be no other leads in this conduit. The length of photo-tube leads should preferably not exceed 6 feet.

16. Type D Photo-tube Housing - Type J Light Source

The photo-tube housing shown in Fig. 12 should preferably be mounted below the paper and the paper should be arranged to slide on top of the glass disc which is part of the photo-tube housing. The light source should be mounted so that the lower end of the snout attached to the lower side of the housing is 3/8 inch away from the paper. It is recommended to mount the light source above the paper and to provide ample ventilation for the equipment. The type J light source should be connected to terminals 5 and 6 on the control panel. The type D photo-tube housing should be connected to terminals X and Y on the control panel. Use only high tension Cable (No. 16 General Cable Corporation Spec. No. 250) for photo-tube connections.

16. Type D Photo-tube Housing (Continued)

The photo-tube leads preferably should not be longer than 6 feet. The leads should be run in a separate conduit, with no other leads in this conduit. The conduit should be grounded.

17. Load Circuit

If the RR-1 register regulator is used it is important that the resistance of the load circuit is sufficiently high so that the KU-627 tube will not be overloaded. Under no circumstances should the load resistance be less than 180 ohms. The characteristic curves for the load circuit are shown in Fig. 4.

PRELIMINARY ADJUSTMENTS

18. Control Cabinet

First read and check installation according to paragraphs 14 to 17. Before a-c. power is applied to the regulator, measure the voltage across terminals 1 and 2 to make sure that the voltage is within the limits specified in paragraph 4. Insert the RJ-550 tube, the RO-587 tube and the KU-627 tube in the tube sockets in the control cabinet. Operate selector or relays so that circuit 9-10 and circuit 7-13 are closed. With no photo-tube inserted in the photo-tube housing, open switch between leads 8 and 29 and close the a-c. switch. Turn the potentiometer all out counter clockwise, and if necessary adjust the position of the knob in relation to the potentiometer shaft so that zero corresponds to the white line on the panel. Turn the potentiometer clockwise and press the button short circuiting the milliampere meter. The RJ-550 plate current should be zero until the dial is between 30 and 40 and should then increase to 3 milliamperes or more while the dial is turned 25 divisions or less. Open circuit 7-13 momentarily so as to de-energize the KU-627 tube. Again close circuit 7-13. Turn the potentiometer counter clockwise to decrease the RJ-550 current. Observe the milliampere meter and read the current when the KU-627 tube breaks down. This current should be between 2.3 MA and 2.6 MA.

19.

Check connections from the photo-tube to terminals X and Y. X should be connected to terminal A in the photo-tube housing. Y should be connected to C. Insert a SR-50 photo-tube in the photo-tube housing or scanner. Connect the switch on the front panel for either "dark" or "light" operation as desired. Open switch between leads 8 and 29. With the plain paper in front of the photo-tube adjust the potentiometer until the RJ-550 plate current is 2.9 milliamperes. Move the spot in front of the photo-tube. The RJ-550 plate current should now be 1.9 milliamperes or less and the KU-627 tube should break down, provided circuits 9-10 and 13-7 are closed. If it is not possible to obtain adjustment of the RJ-550 plate current by means of the potentiometer, it may be necessary to decrease the grid resistance of the RJ-550 tube from 10 Megohms to 5 Megohms. This is done by closing the switch between leads 8 and 29. It should be noted that, in order to obtain maximum sensitivity it is desirable to use 10 Megohms grid resistance. The switch between leads 8 and 29 should therefore be closed only when necessary in order to operate within the range of potentiometer control.

20. Selector Switches

The selector switches should be arranged as outlined in paragraph 6. It is important that the conducting sections of the selector switches are not grounded, and it is recommended

20. Selector Switches (Continued)

to check the ground resistance by means of a Megger. This ground resistance should be 10 Megohms or higher.

PLACING THE EQUIPMENT INTO SERVICE

21. When the register regulator has been installed as previously outlined in this Instruction Book, the equipment may be placed into service. The position of the cut may be adjusted either by adjusting the position of the scanner or by adjusting the position of the selector switch relative to the cutter.

MAINTENANCE

22. It is recommended to test the equipment once every week as outlined in paragraph 19. It is desirable at the same time to inspect, and if necessary, clean the selector switch. If any trouble is experienced in respect to the operation of the device, the A-C. voltages should be checked, preferably by installing a recording voltmeter and have it in operation for some time to make sure that the A-c. voltages do not vary outside the limits specified in this Instruction Book.

TEST DATA

23. If the regulator does not perform satisfactorily, check as follows:

(a) Inspect all tubes to see that the filaments are lighted. If a filament is not lighted the filament circuit is open, and the tube should be replaced.

(b) Disconnect the ground wire to terminal 14 and measure the resistance between terminal 14 and ground. This resistance should be 10 Megohms or higher. If the resistance is less than 10 Megohms, disconnect all leads to the control cabinet to determine whether the ground is in the external or internal connections.

(c) Check connections from terminals X and Y to the photo-tube. Terminal X should be connected to the photo-tube terminal marked C, and terminal Y should be connected to A.

(d) By means of a d-c. voltmeter with resistance of at least 500 ohms per volt check the voltage drop across the voltage divider 18-19. The voltage drop should be within the following limits.

TEST DATA (Continued)

Step	Volts Max.	Volts Min.
14 - 18	110	80
14 - 28	100	70
22 - 28	45	30
22 - 19	130	95

If the voltage drop across any section of the voltage divider is considerably higher than the maximum values given above, it is an indication that this section is open circuited, and voltage divider 18-19 should be replaced. If the voltage drop across all sections is less than the minimum values given above, the RO-587 tube should be replaced.

(e) Test all resistors for correct resistance values. The resistances should be within the following limits.

Resistor Connected Between Leads	Resistance in Ohms Min.	Resistance in Ohms Max.
9 - 28	450000	550000
9 - 30	450000	550000
10 - 19	45000	55000
29 - 31	4500000	5500000
8 - 29	4500000	5500000

Potentiometer resistance 19000 to 21000 Ohms.

(f) Measure with a d-c. voltmeter with internal resistance 500 ohms per volt or higher, the voltage across 7-22 when the KU-627 tube is removed from its socket. This voltage should be 125 volts or higher.

(g) Check condenser sections F-H, D-E and A-C, to see that the condenser is not short circuited. In order to make this test unsolder the leads connected to one side of the section and test resistance across the section by means of a Megger. The resistance should be 500000 ohms or higher. Replace the condenser if the resistance is less than 500000 ohms.

TUBE LIFE

24.

The RJ-550 and the RO-587 tubes may fail either due to open filament or due to decreased emmission. Decreased emmission of the RJ-550 tube will give decreased sensitivity. The RJ-550 tube should be replaced if more than 25 potentiometer divisions are needed to change the RJ-550 plate current from zero to 3 milliamperes as outlined in paragraph 18. A tube life of 5000 to 10000 operating hours can be expected of the RJ-550 tube. The RO-587 tube should be replaced in line with instructions given in paragraph 23-d. The average life of the RO-587 tube is 5000 to 7500 operating hours. The KU-627 tube should be replaced if less than 2.3 milliamperes RJ-550 plate current is needed to cause the tube to break down provided the voltage across 7-22 and 18-19 are as outlined in paragraph 23. An average life of 5000 to 7500 operating hours is the normal expectance for the KU-627 tube. The photo tube should be replaced when the sensitivity is decreased so as to make consistent regulator operation difficult. The easiest way to test the photo tube is to insert a new photo tube in the photo-tube housing and to compare the response of the two photo-tubes.

SPARE PARTS

(also see Paragraph 26)

25. A complete set of spare tubes should be kept in stock as follows:

Tube Type	Recommended Stock for One Unit	Five Units
SR-50	1	2
RJ-550	1	2
KU-627	1	2
RO-587	1	2
Lamp Style No. 849 085 for transmitted light application	1	4
Lamp Stype No. 856 455 for reflected light application	1	4

RENEWAL PARTS

26.

(a) Type RR-1 Register Regulator Style No. 869 973 (Fig. 2)

Description of Part	Req.	Recommended Stock for 1 Unit	5 Units	Style No.
Power Transformer	1	0	0	869 968
Transformer	1	0	0	841 955
Reactor	1	0	0	Dwg. M 7400176-G4
Rectox	2	0	2	700 766
Condenser	1	0	1	841 958
Resistor 18 - 19	1	0	1	833 909
Resistor 8-29	1	0	1	5 MEG. Type C.
Resistor 29-31	1	0	1	5 MEG. Type C.
Resistor 10-19	1	0	1	846 669
Resistor 20-21	1	0	1	75 Ohms Type UH
Resistor 9 - 28	1	0	1	846 667
Resistor 9 - 30	1	0	1	846 667
Potentiometer	1	0	1	846 672
Switch 1-11	1	0	0	Cat. No. 5202
Switch (Dark - Light)	1	0	0	Cat. No. 2002
Switch 8 - 29	1	0	0	Cat. No. 5151-B
Milliampere Meter	1	0	1	818 510
Tube Socket	3			766 732

26. (Continued)

(b) Type RR-1A Register Regulator Style No. 869 974 (Fig. 2).

Same as for the RR-1 Regulator except add:

Relay	0	1	875 457

(c) Photo-tube Housing (Type D), for transmitted light Style No. 849 083 (without Photo-tube) Fig. 12.

1/2" Conduit Lock Nut	1	0	0	.....
Name Plate Style No. 11874	1	0	0	.....
Lacquered High Tension Cable No. 16, Spec. No.250 General Cable Corp.	24 ft.	0	0	.....
Housing	1	0	0	847 135
Base	1	0	0	847 136
Aperture	1	0	0	39-A-475 It.8
Panel	1	0	0	847 045
Tubular Rivet	2	0	0	698 807
Connector	2	0	0	847 055
Contact	2	0	0	777 737
Nipple	1	0	0	27-D-388 It.1
Aperture Holder	1	0	0	21-C-253 It.1
Aperture Pad	1	0	0	21-C-253 It.2
Window	1	0	0	849 991

(d) Type J Light Source for transmitted light Style No. 849 084 (with lamp) Fig. 13.

Description of Part	Req.	Recommended Stock for 1 Unit	Recommended Stock for 5 Units	Style No.
Lamp Socket	1	0	0	831 705
Name Plate No.11874	1	0	0	.....
Lamp, 6 volts, 5 amp.	1	1	2	849 085
Base	1	0	0	847 136
Housing	1	0	0	39-A-475 It.7
Aperture	1	0	0	39-A-475 It.8
Snap Ring	1	0	0	35-B-416 It.10
Panel	1	0	0	847 046
Lens Holder	1	0	0	35-B-416 It.16
Nipple	1	0	0	27-D-388 It.1

(e) Type E Scanner for Reflected Light Style No. 856 471 - Fig. 10

Lens	1	0	0	54-B-414 It.5

26. (Continued)

(f) Type F Scanner for Reflected Light Style No. 850679 - Fig. 11.

Lens	2	0	0	849 887

Selector Switch Style No. 850641 - Fig. 6

Ball Bearing	2	0	0	543 441
Carbon Holder Complete	3	0	1	170 508
Carbon Brushes	3	3	3	832 403

Circuit Interrupter Assembly, Style No. 856 361 - Fig. 8

Short Segment	2	0	0	48-B-503 It.2
Long Segment	2	0	0	48-B-503 It.3
Micarta Disc Without Center Hole	2	0	0	48-B-503 It.4
Copper Rivet	16	0	0	48-B-503 It.5
Brass Screw	2	0	0	48-B-503 It.6
Lock Washer	2	0	0	48-B-503 It.7
Nut	2	0	0	48-B-503 It.8

Carbon Brush & Brushholder for use with Circuit Interrupter Style No. 856 361

Description of Part	Req.	1 Unit	5 Units	Style No.
Carbon Brush	2	2	4	832 403
Spring for Carbon Brush	2	0	2	170 509
Carbon Brushholder	2	0	0	374 187

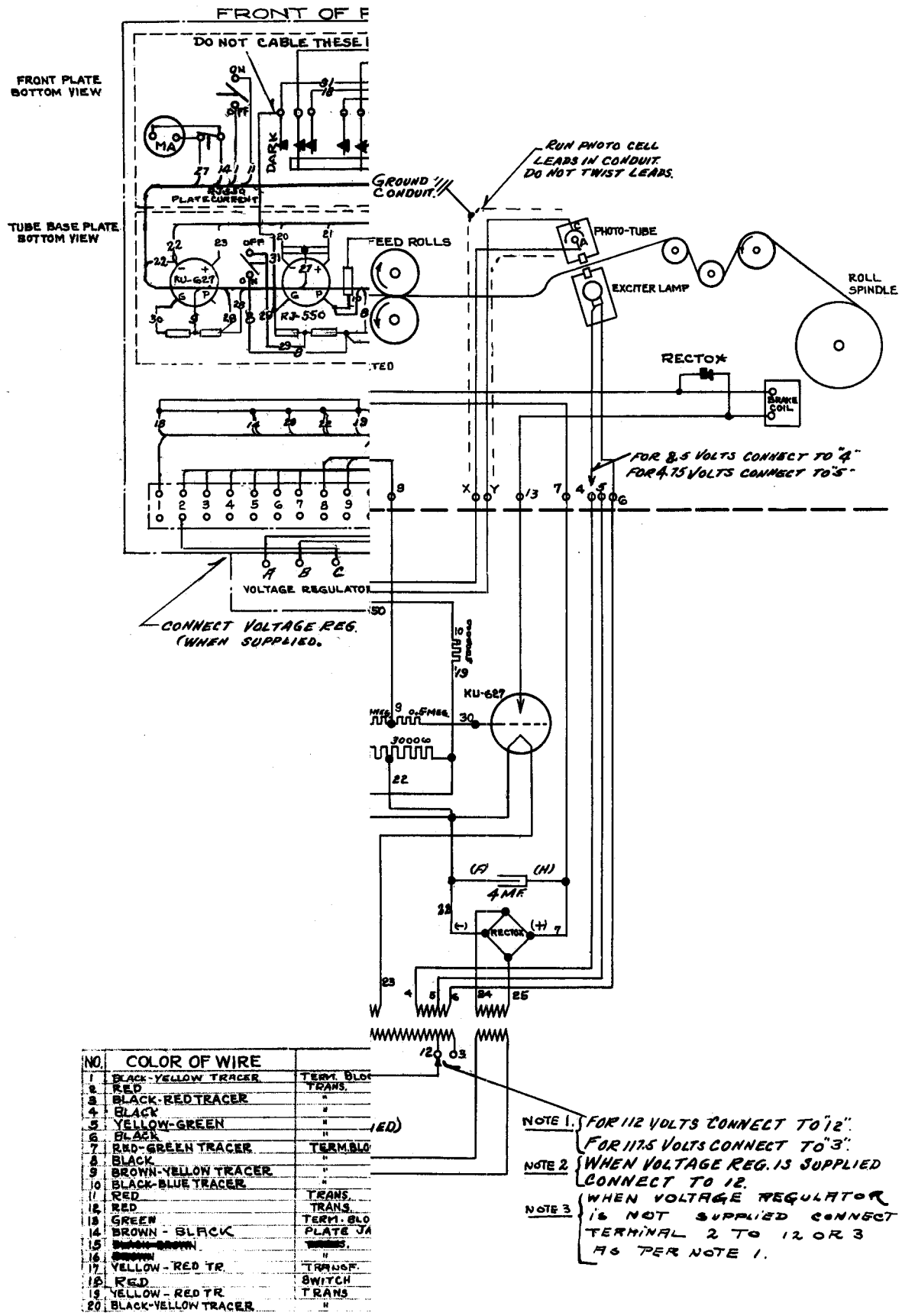

NO.	COLOR OF WIRE	
1	BLACK-YELLOW TRACER	TERM. BLO
2	RED	TRANS.
3	BLACK-RED TRACER	"
4	BLACK	"
5	YELLOW-GREEN	"
6	BLACK	"
7	RED-GREEN TRACER	TERM. BLO
8	BLACK	"
9	BROWN-YELLOW TRACER	"
10	BLACK-BLUE TRACER	"
11	RED	TRANS.
12	RED	TRANS.
13	GREEN	TERM. BLO
14	BROWN - BLACK	PLATE JA
15	[redacted]	[redacted]
16	[redacted]	"
17	YELLOW - RED TR.	TRANSF.
18	RED	SWITCH
19	YELLOW - RED TR.	TRANS
20	BLACK-YELLOW TRACER	"

Fig. 1 - Schematic Diagr

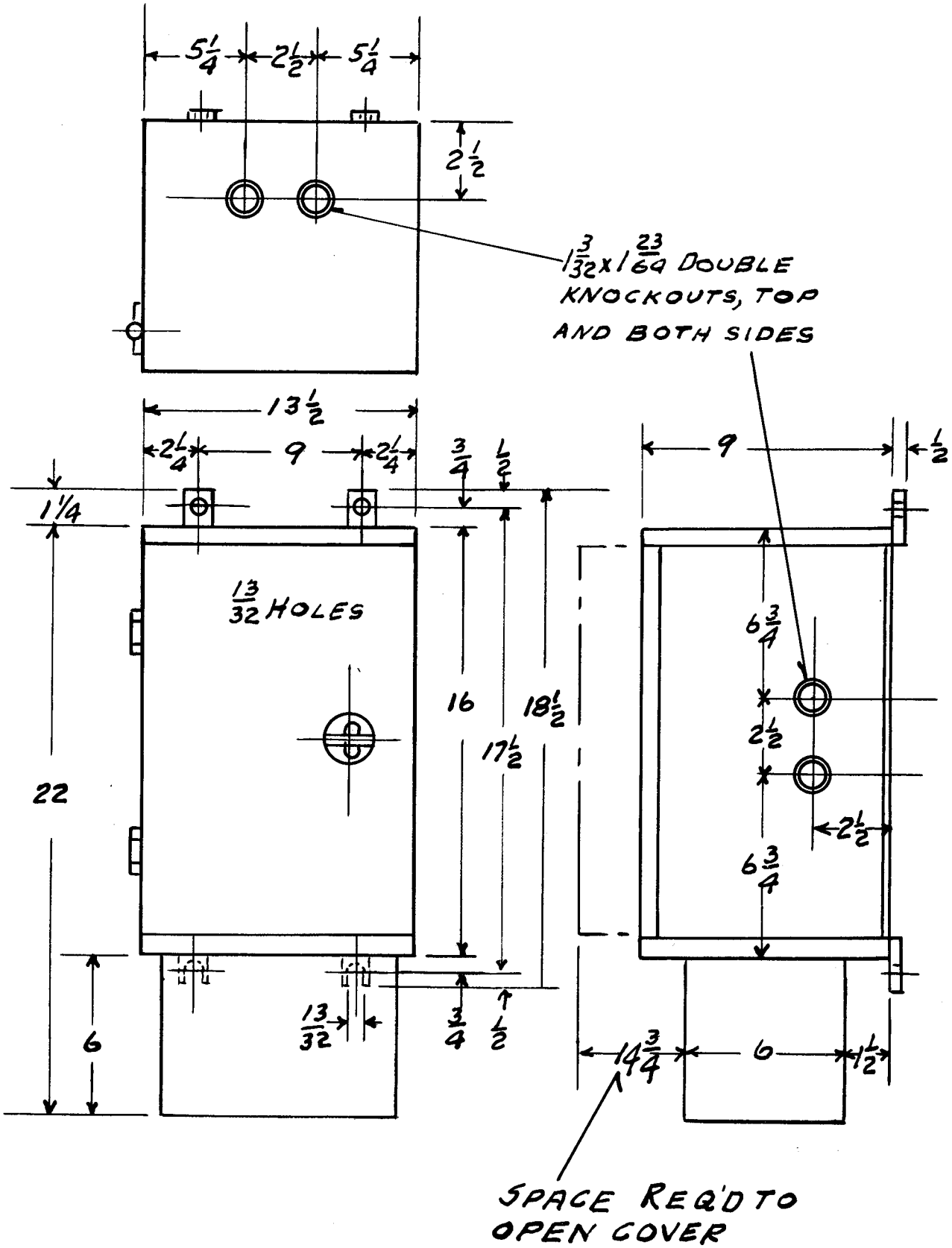

Fig. 2 - Outline of RR-1 and RR-1A Register Regulator.

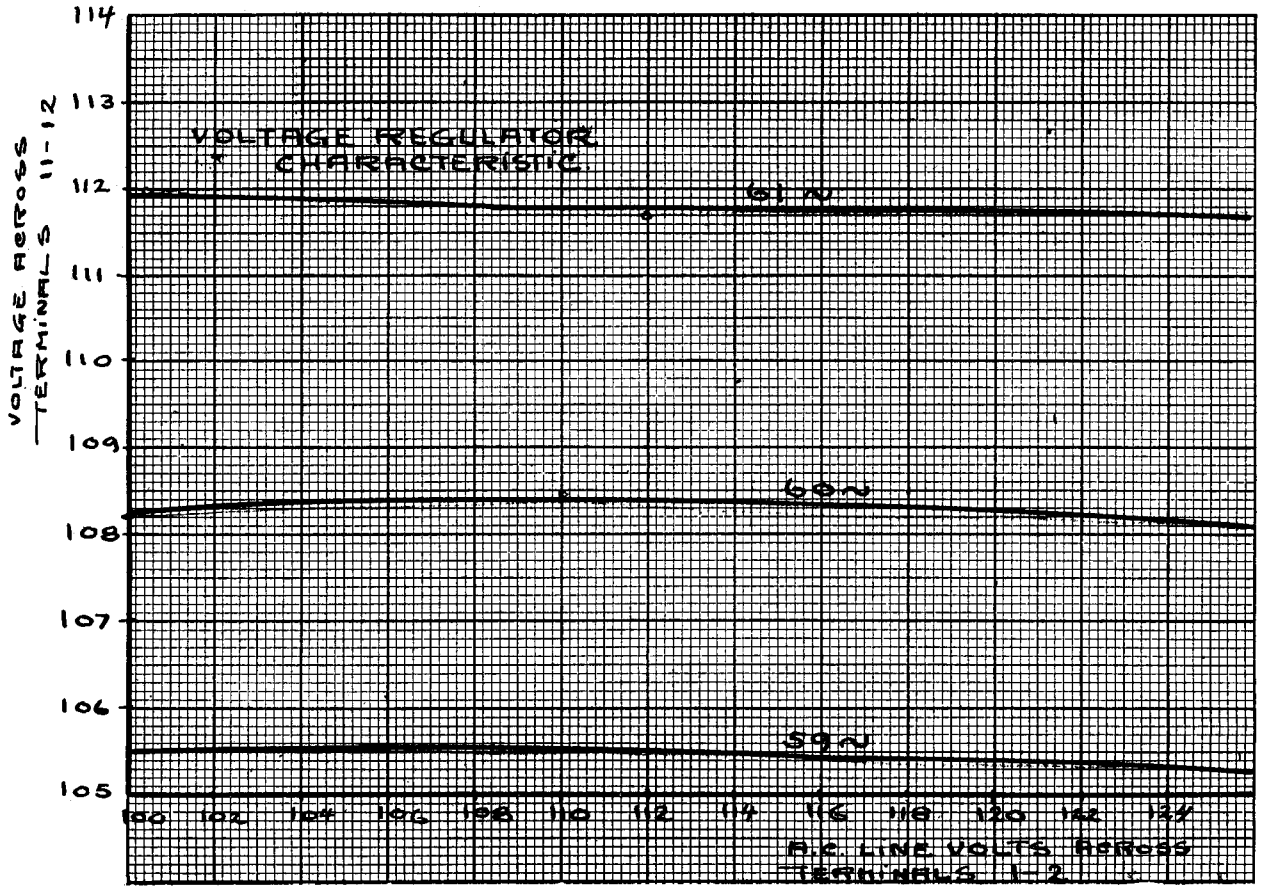

Fig. 3 - Frequency Characteristic of Voltage Regulator.

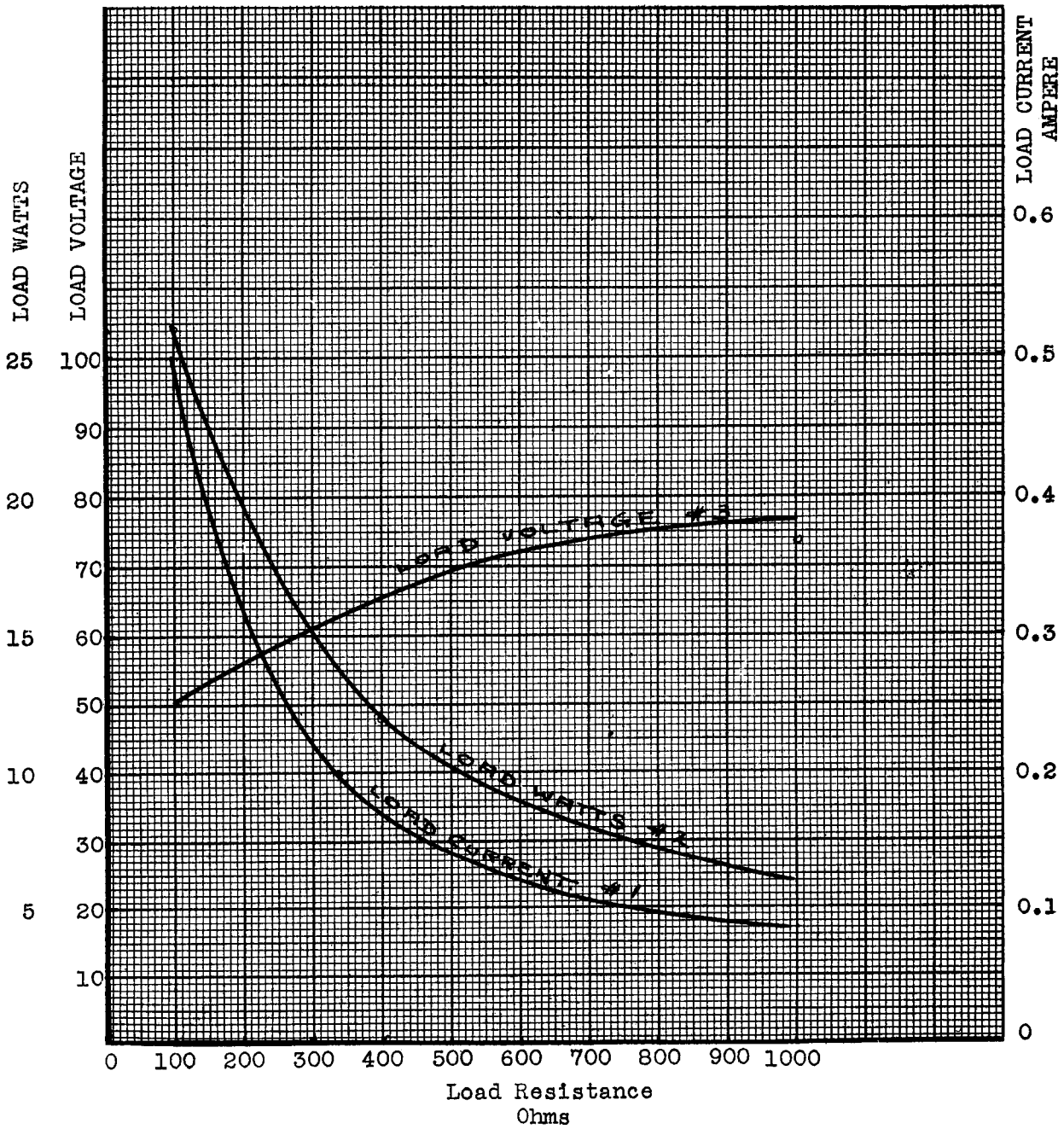

Fig. 4 - Load Characteristic Curves.

CTRIC & MFG. CO., EAST PITTSBURGH, PA., U. S. A.

CONTROL WIRING DIAGRAM

PAPER REGISTER CONTROL, TYPE RR-1A.

SUB. No. 1834

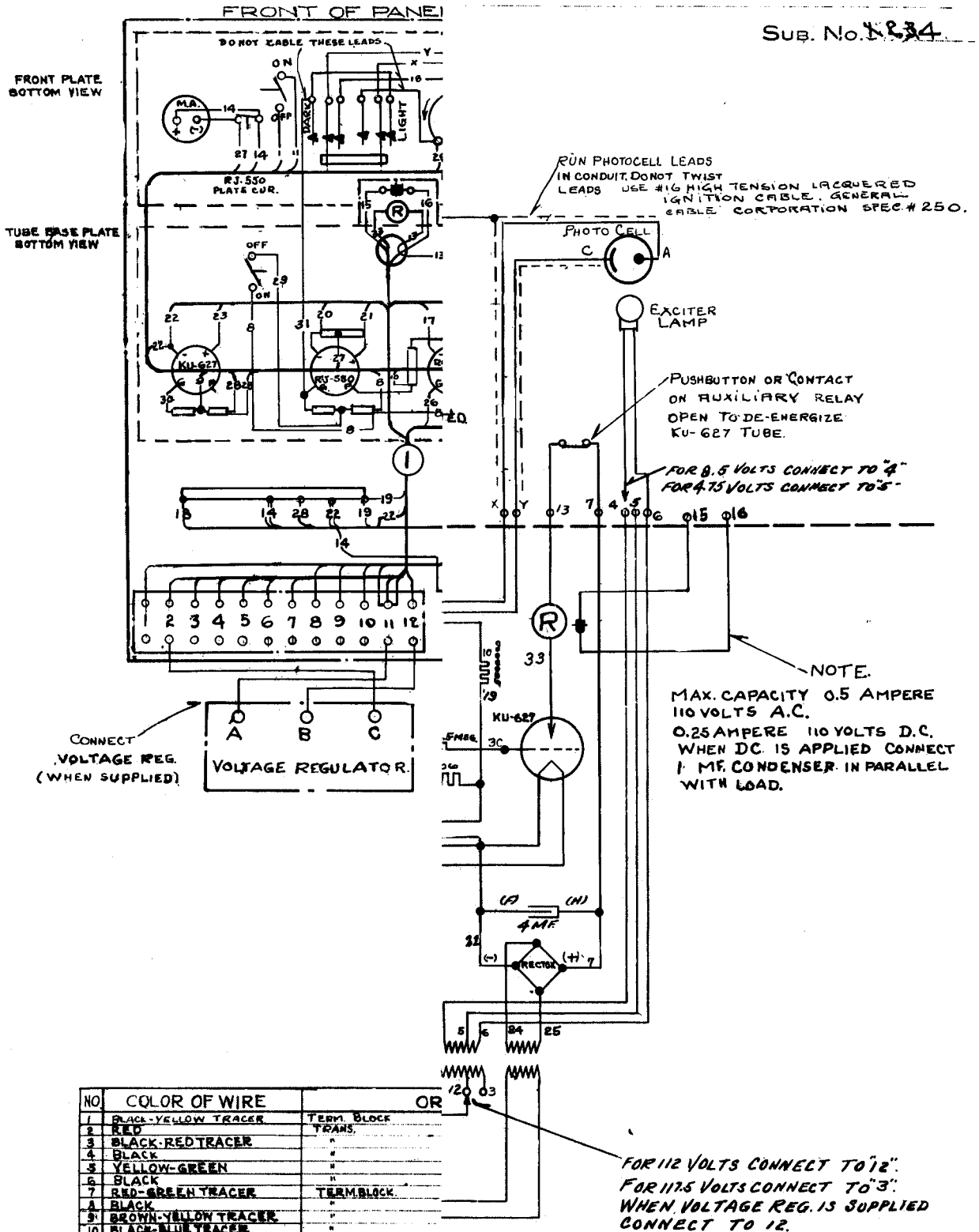

NO	COLOR OF WIRE	OR
1	BLACK-YELLOW TRACER	TERM. BLOCK
2	RED	TRANS.
3	BLACK-RED TRACER	"
4	BLACK	"
5	YELLOW-GREEN	"
6	BLACK	"
7	RED-GREEN TRACER	TERM. BLOCK
8	BLACK	"
9	BROWN-YELLOW TRACER	"
10	BLACK-BLUE TRACER	"
11	RED	TRANS.
12	RED	TRANS.
13	GREEN	TERM. BLOCK
14	BROWN - BLACK	PLATE JACK
15	BLACK-BROWN	TERMINAL
16	BROWN	"
17	YELLOW-RED TR.	TRANS.
18	RED	SWITCH
19	YELLOW - RED TR.	TRANS
20	BLACK-YELLOW TRACER	"

Fig. 5 - Schematic Diagram of

Fig. 6 - Selector Switch Style No. 850 641.

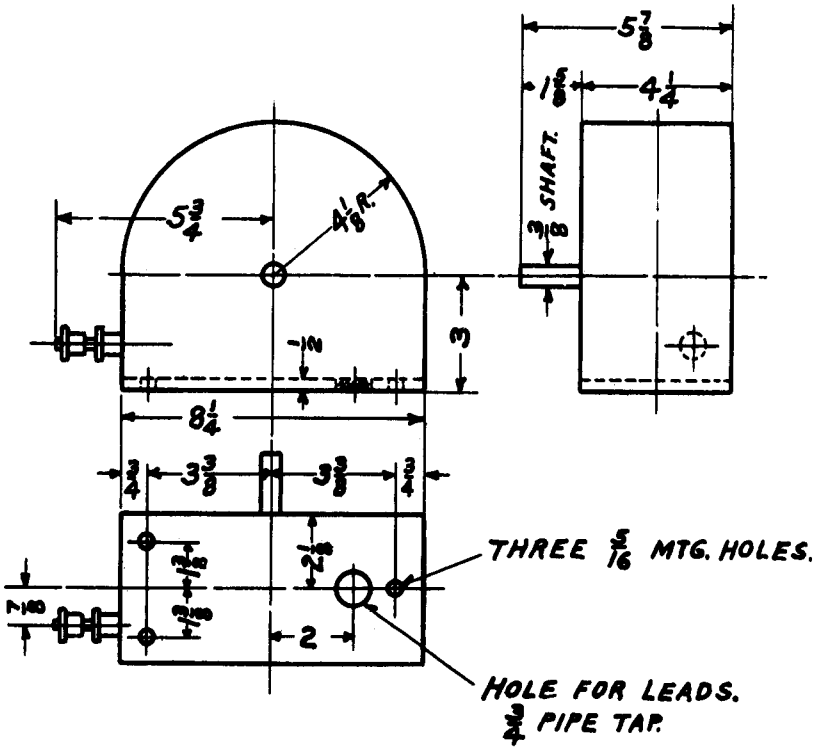

Fig. 7 - Outline of Selector Switch, Style No. 850 641.

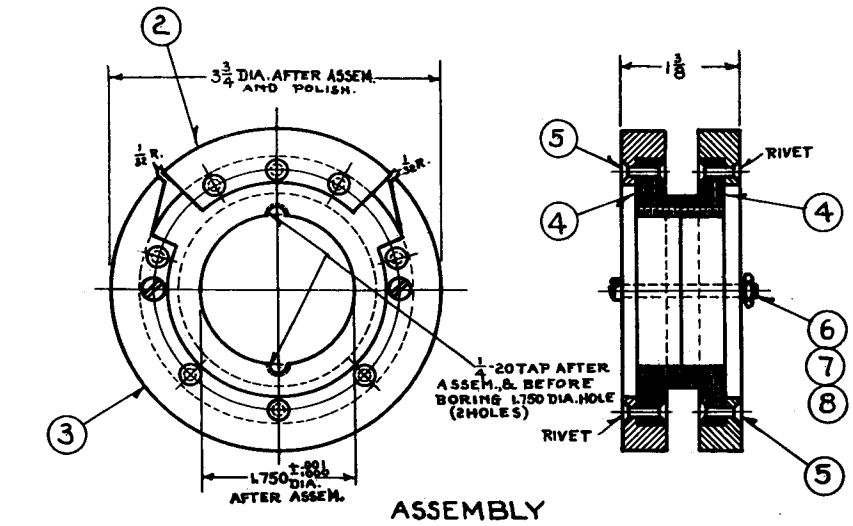

Dwg. 48-B-503

Item	Description-Material-Std. Dwg.	Tr. Number	Style No.	Pat. No.	Req.
1	CONTACT RING FROM 1/2" OF 4" DIA. "7" ALLOY				2
* 2	SEGMENT, MAKE FROM ITEM 1				2
* 3	SEGMENT, MAKE FROM ITEM 1				2
4	RING, 3 1/4" X 3 1/4" X 1/2" TK. MICARTA PLATE #431				2
5	1/8" X 5/8" CSK. HD. C. RIVET				16
6	1/8" .164-32 X 1 1/2 FIL. HD. B.M. SC.				2
7	1/8" .164 LOCK WASHER				2
8	1/8" .164-32 HEX. B.M. SC. NUT				2

* ONE OF ITEM #1 WILL MAKE ONE OF ITEM #2 AND ONE OF ITEM #3
CAM ASSEMBLY COMPLETE = 3 #856361 = 1 OF ITEMS 1 TO 8 THIS DWG.

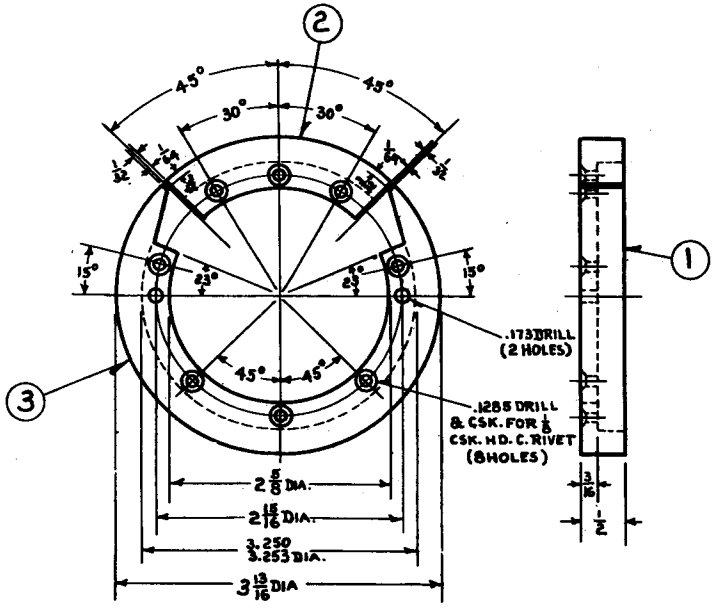

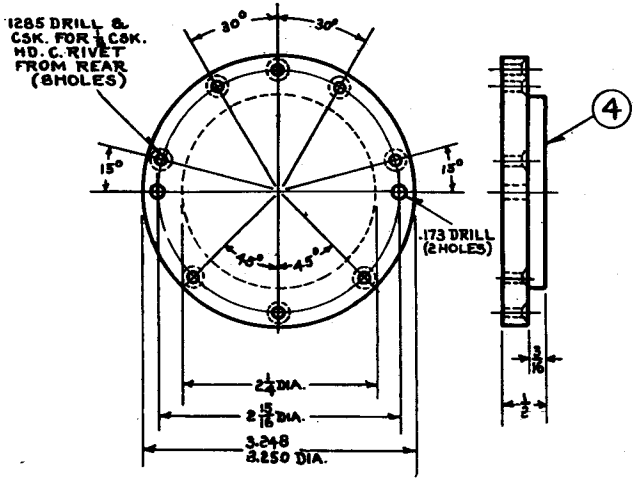

VARIATIONS ON FINISHED DIMENSIONS UNLESS OTHERWISE MARKED ±.010

Fig. 8 - Outline of Selector Switch Cam, Style No. 856 361.

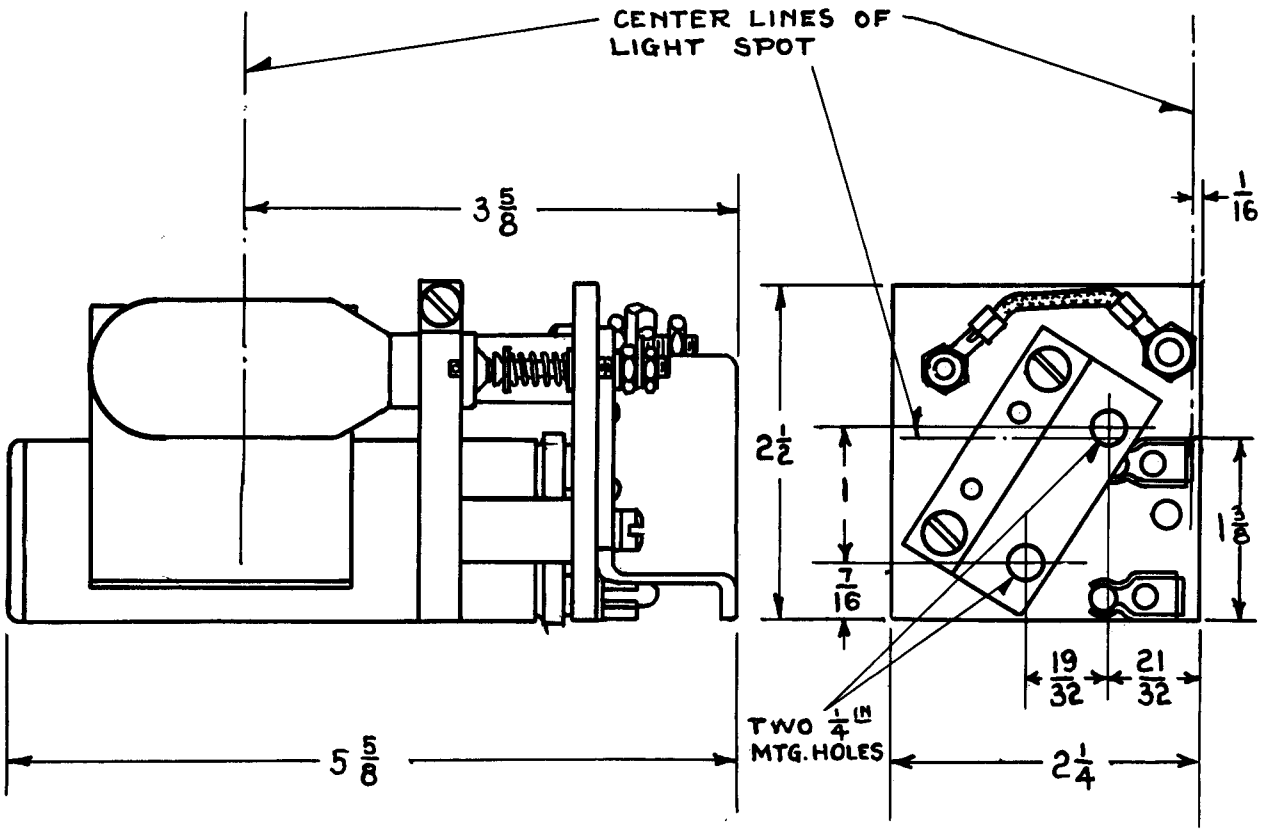

Fig. 10 - Outline of Type E Scanner for Reflected Light.

OUTLINE

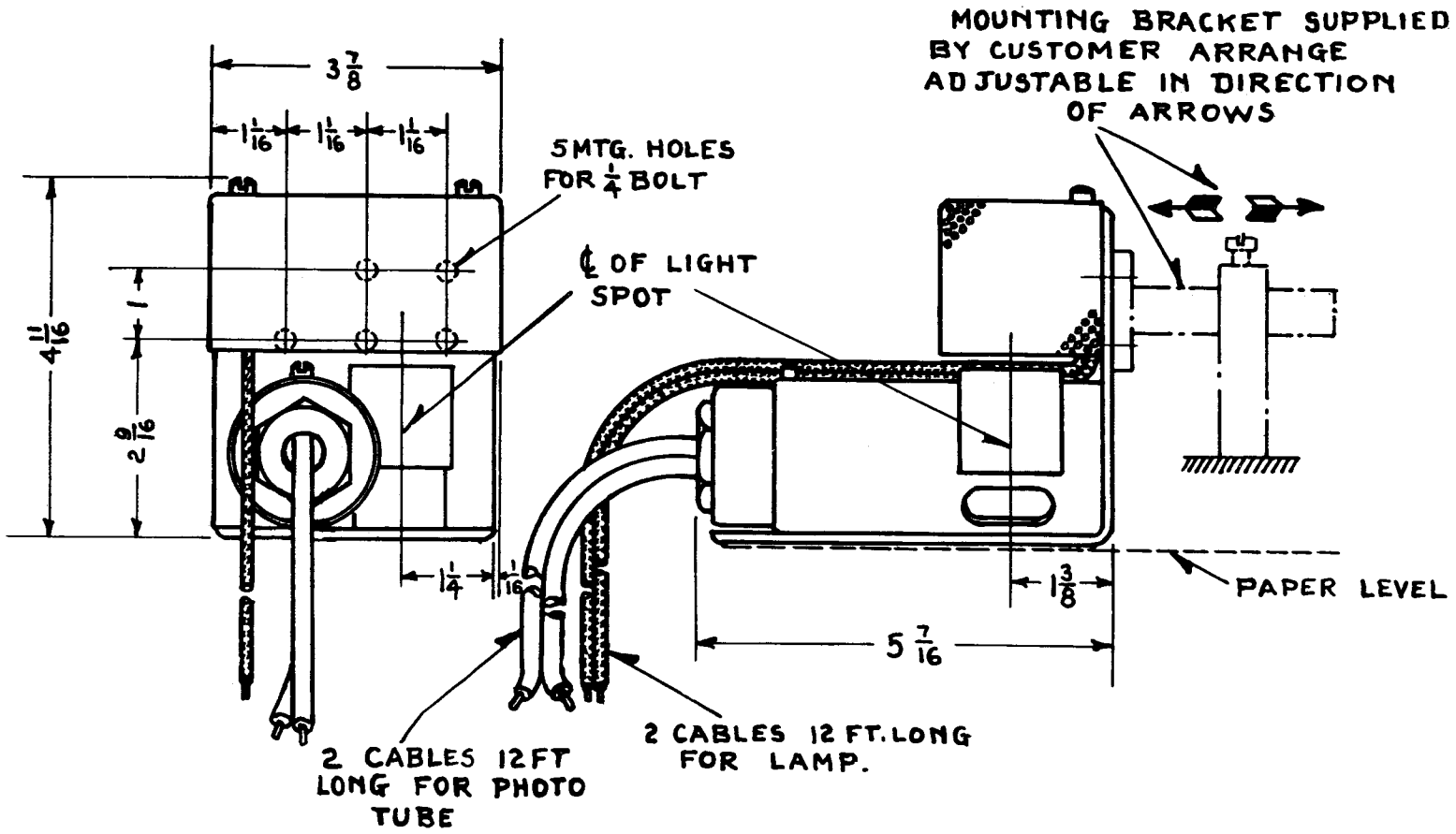

Fig. 11 - Outline of Type F Scanner Style No. 850 679 for Reflected Light.

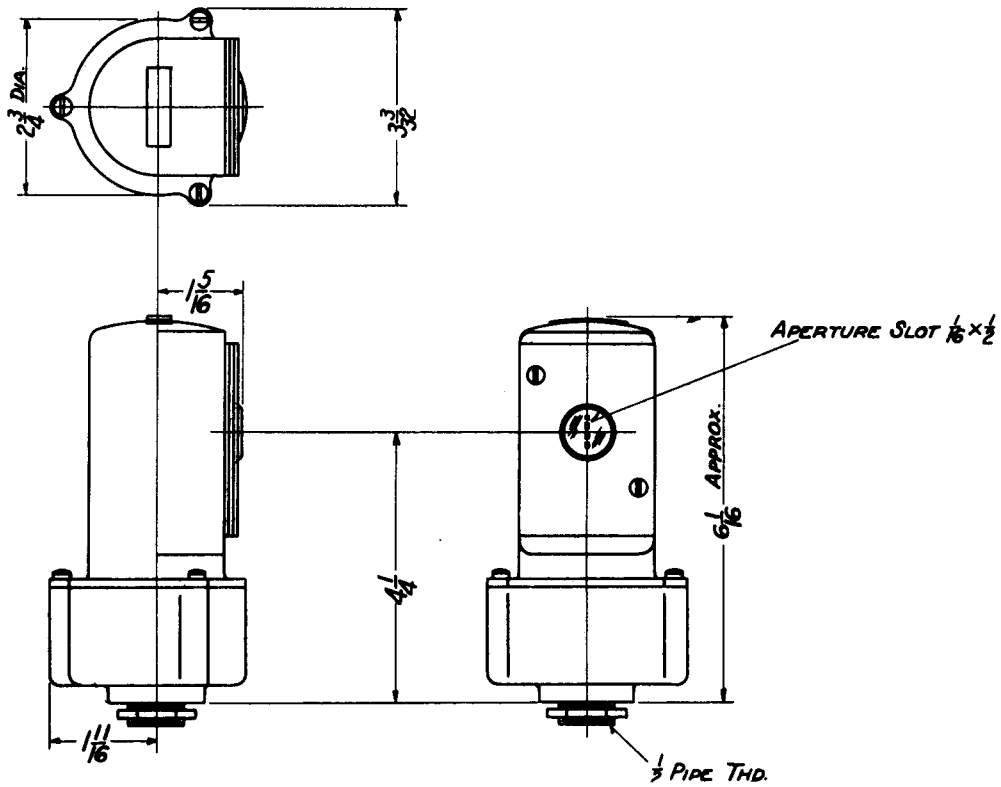

Fig. 12 - Outline of Type D Phototube Housing.

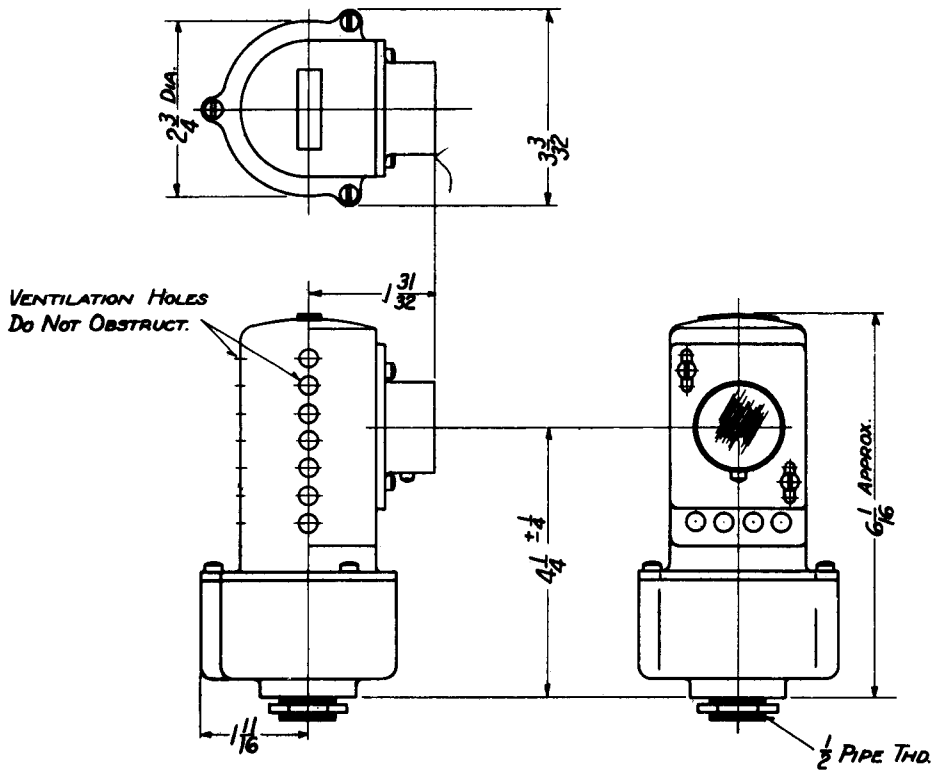

Fig. 13 - Outline of Type J Light Source.

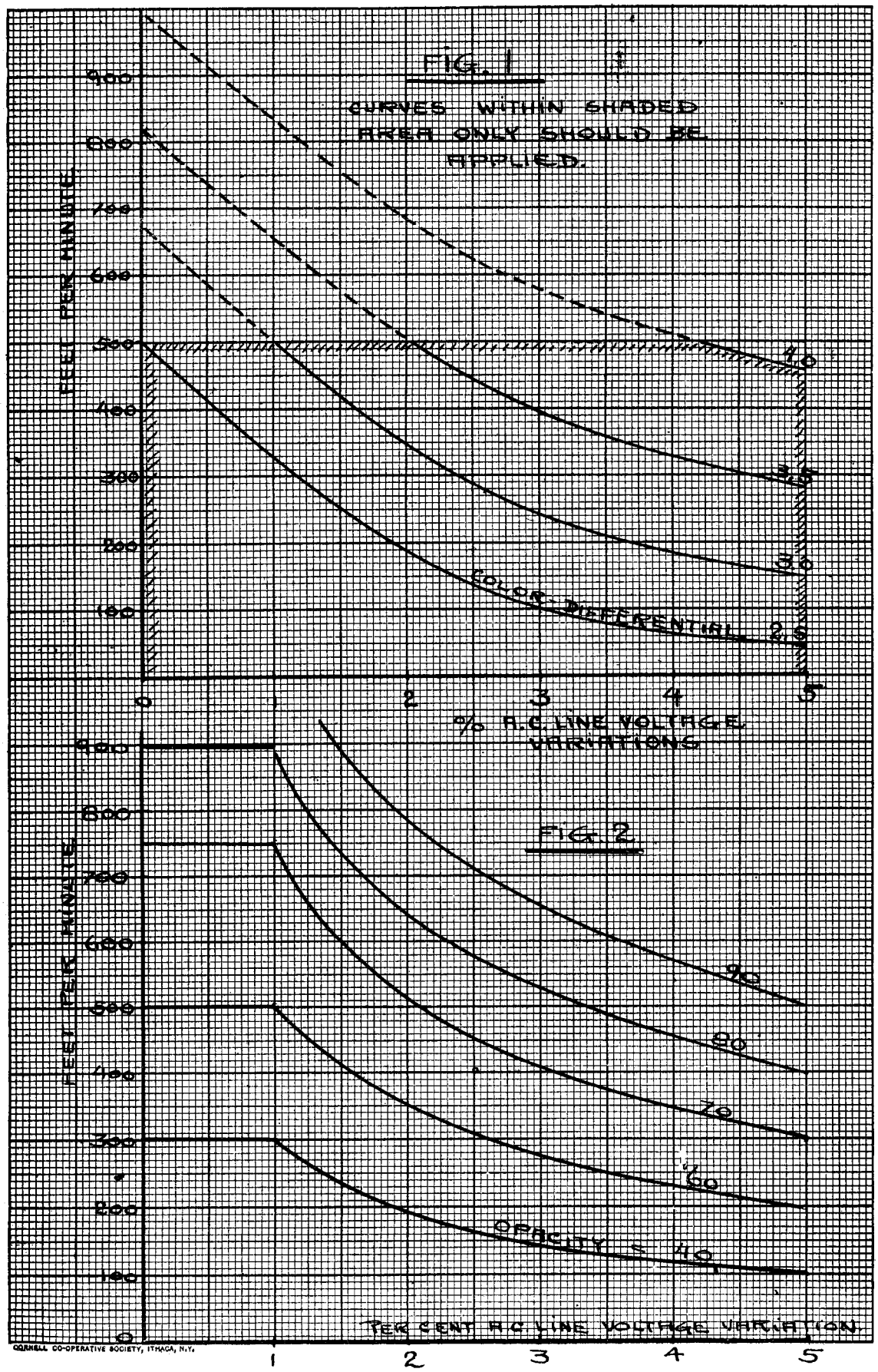

Fig. 14 - Curves Showing Effect of Voltage Variation on Paper Speed.

MEMORANDUM

(Use Ink)

Westinghouse Electric & Manufacturing Company, East Pittsburgh, Pa.

WESTINGHOUSE SALES OFFICES

ABILENE, KAN., 300 N. Cedar St.
AKRON, OHIO, 11 S. Main St.
ALBANY, N. Y., 360 Broadway
ALLENTOWN, PA., Maple & Law Sts.
APPLETON, WIS., *1 Bellaire Court
*ATLANTA, GA., 426 Marietta St. N. W.
BAKERSFIELD, CALIF., 2224 San Emedio St.
BALTIMORE, MD., 118 E. Lombard St.
BEAUMONT, TEX., La Salle Hotel
BIRMINGHAM, ALA., 2030 Second Ave.
BLUEFIELD, W. VA., 208 Bluefield Ave.
*BOSTON, MASS., 10 High St.
BRIDGEPORT, CONN., Bruce Ave. and Seymour St.
*BUFFALO, N. Y., 814 Ellicott Square
†BURLINGTON, IOWA, P. O. Box 197
†BURLINGTON, VT., 208 Park Ave.
*BUTTE, MONT., 52 E. Broadway
CANTON, OHIO, 120 Tuscarawas St., West
*CHARLOTTE, N. C., 210 E. Sixth St.
CHATTANOOGA, TENN., 536 Market St.
CHICAGO, ILL., 20 N. Wacker Drive
*CINCINNATI, OHIO, 207 W. Third St.
*CLEVELAND, OHIO, 1216 W. 58th St.
*COLUMBUS, OHIO, 209 S. Third St.
*DALLAS, TEX., 209 Browder St.
DAVENPORT, IOWA, 206 E. Second St.
DAYTON, OHIO, 32 N. Main St.
*DENVER, COLO., 910 Fifteenth St.
*DETROIT, MICH., 5757 Trumbull Ave.
DULUTH, MINN., 10 East Superior Street
ELMIRA, N. Y., 338 E. Water St.
*EL PASO, TEXAS, 303 N. Oregon St.
*EMERYVILLE, CALIF., 5815 Peladeau St.
†ERIE, PA., 102 W. 9th St.
EVANSVILLE, IND., P. O. Box 457.
FAIRMONT, W. VA., 602 Cleveland Ave.
FORT WAYNE, IND., 1010 Packard Ave.
FORT WORTH, TEX., 501 Jones St.
GARY, IND., 735 Arthur St.
GRAND RAPIDS, MICH., 507 Monroe Ave. N.W.
GREENVILLE, S. C., West Earle St.
HAMMOND, IND., 403 Waltham St.
*HOUSTON, TEX., 608 Fannin St.
*HUNTINGTON, W. VA., 209 Ninth St.
INDIANAPOLIS, IND., 539 Madison Ave.
ISHPEMING, MICH., 433 High St.
JACKSON, MICH., 212 W. Michigan Ave.
JOHNSTOWN, PA., 47 Messenger St.
*KANSAS CITY, MO., 2124 Wyandotte St.
†KNOXVILLE, TENN., 602 Gay St.
LITTLE ROCK, ARK., 1115 West Twenty-fourth St.
*LOS ANGELES, CALIF., 420 S. San Pedro St.
LOUISVILLE, KY., 322 W. Broadway
MADISON, WIS., 508 Edgewood Ave.
MEMPHIS, TENN., 130 Madison Ave.
MIAMI, FLA., P. O. Box 1168.
MILWAUKEE, WIS., 546 N. Broadway
*MINNEAPOLIS, MINN., 2303 Kennedy St. N.E.
MONROE, LA., 1610 N. Fourth St.
NASHVILLE, TENN., 219 N. Second Ave.
*NEWARK, N.J., Haynes Ave. and Lincoln Highway
NEW HAVEN, CONN., 240 Cedar St.
*NEW ORLEANS, LA., 333 St. Charles St.
NEW YORK, N. Y., 30 Rockefeller Plaza
NIAGARA FALLS, N. Y., 205 Falls St.
OKLAHOMA CITY, OKLA., 10 E. California St.
OMAHA, NEB., 409 S. Seventeenth St.
PEORIA, ILL., 104 E. State St.
*PHILADELPHIA, PA., 3001 Walnut St.
PHOENIX, ARIZ., 11 W. Jefferson St.
†PITTSBURG, KAN., P. O. Box 15
*PITTSBURGH, PA., 435 Seventh Ave.
†PORTLAND, ME., P. O. Box 1797
*PORTLAND, ORE., 309 Southwest Sixth Ave.
PROVIDENCE, R. I., 393 Harris Ave.
RALEIGH, N. C., 803 N. Person St.
RICHMOND, VA., 301 S. Fifth St.
ROCHESTER, N. Y., 410 Atlantic Ave.
ROCKFORD, ILL., 130 S. Second St.
SACRAMENTO, CALIF., 1107 Ninth St.
*SALT LAKE CITY, UTAH, 10 W. First South St
†SAN ANTONIO, TEX., 212 East Houston St.
SAN FRANCISCO, CALIF., 1 Montgomery St.
*SEATTLE, WASH., 603 Stewart St.
SIOUX CITY, IOWA, 2311 George St.
†SOUTH BEND, IND., 216 E. Wayne St.
SPOKANE, WASH., 158 S. Monroe St.
SPRINGFIELD, ILL., 130 S. Sixth St.
SPRINGFIELD, MASS., 395 Liberty St.
*ST. LOUIS, MO., 411 N. Seventh St.
†SYRACUSE, N. Y., 420 N. Geddes St.
TACOMA, WASH., 1023 "A" Street
TAMPA, FLA., 417 Ellamae Ave.
TOLEDO, OHIO, 245 Summit St.
†TULSA, OKLA., 303 E. Brady St.
*UTICA, N. Y., 113 N. Genesee St.
WASHINGTON, D.C., 1434 New York Ave. N.W.
WATERLOO, IOWA, 328 Jefferson St.
WICHITA, KAN., 400 South Emporia St.
WILKES-BARRE, PA., 267 N. Pennsylvania Ave.
WORCESTER, MASS., 32 Southbridge St.
YORK, PA., 143 S. George St.
†YOUNGSTOWN, OHIO, 25 E. Boardman St.
The HAWAIIAN ELECTRIC CO., Ltd., Honolulu, T. H.—Agent

*Warehouses located in these cities.

WESTINGHOUSE AGENT-JOBBERS

ABILENE, KAN., Union Electric Co.
AKRON, OHIO, The Moock Elec. Supply Co.
ALBANY, N. Y., Westinghouse Elec. Sup. Co., Inc.
ALLENTOWN, PA., Westinghouse Elec. Sup. Co.
ATLANTA, GA., Westinghouse Elec. Sup. Co.
AUGUSTA, ME., Wetmore-Savage Elec. Supply Co.
BALTIMORE, MD., Westinghouse Electric Supply Co.
BANGOR, ME., Wetmore-Savage Elec. Sup. Co.
BINGHAMTON, N. Y., Westinghouse Electric Supply Co., Inc.
BIRMINGHAM, ALA., Moore-Handley Hdwe. Co.
BLUEFIELD, W. VA., Superior-Sterling Co.
BOSTON, MASS., Wetmore-Savage Elec. Sup. Co.
BUFFALO, N. Y., McCarthy Bros. & Ford
BURLINGTON, VT., Wetmore-Savage Elec.Sup.Co.
BUTTE, MONT., Westinghouse Elec. Sup. Co.
CANTON, OHIO, The Moock Elec. Supply Co.
CHARLOTTE, N. C., Westinghouse Elec. Sup. Co.
CHATTANOOGA, TENN., Mills & Lupton Sup. Co.
CHICAGO, ILL., Hyland Elec. Supply Co.
CHICAGO, ILL., Westinghouse Elec. Sup. Co., Inc.
CINCINNATI, O., The Johnson Elec. Sup. Co.
CLEVELAND, O., Westinghouse Elec. Sup. Co.
COLUMBIA, S. C., Westinghouse Elec. Sup. Co.
COLUMBUS, O., The Hughes-Peters Elec. Corp.
COLUMBUS, O., Pixley Elec. Supply Co.
DALLAS, TEX., Westinghouse Elec. Sup. Co.
DENVER, COLO., The Mine & Smelter Sup. Co.
DES MOINES, IA., Westinghouse Elec. Sup.Co.,Inc.
DETROIT, MICH., Westinghouse Elec. Sup. Co.
DULUTH, MINN., Westinghouse Electric Supply Co., Inc.
EL PASO, TEX., The Mine & Smelter Sup. Co.
EL PASO, TEX., Zork Hardware Co.
ERIE, PA., Star Electrical Co.
EVANSVILLE, IND., Westinghouse Elec. Sup. Co.
FLINT, MICH., Westinghouse Elec. Sup. Co.
FORT WORTH, TEX., Westinghouse Elec. Sup. Co.
GRAND RAPIDS, MICH., Westinghouse Electric Supply Co.
GREENVILLE, S. C., Westinghouse Elec. Sup. Co.
HOUSTON, TEX., Westinghouse Elec. Sup. Co.
HUNTINGTON, W. VA., Banks-Miller Sup. Co.
INDIANAPOLIS, IND., Westinghouse Elec. Sup. Co.
JACKSONVILLE, FLA., Westinghouse Elec.Sup.Co.
KANSAS CITY, MO., Columbian Electrical Co.
†KNOXVILLE, TENN., Westinghouse Elec. Sup. Co.
LOS ANGELES, CALIF., Westinghouse Electric Supply Co.
LOUISVILLE, KY., Tafel Electric Co.
MADISON, WIS., Westinghouse Elec. Sup. Co., Inc.
MEMPHIS, TENN., Westinghouse Elec. Sup. Co.
MILWAUKEE, WIS., Westinghouse Electric Supply Co., Inc.
MINNEAPOLIS, MINN., Westinghouse Electric Supply Co., Inc.
MONROE, LA., Monroe Hardware Co.
NASHVILLE, TENN., Tafel Electric Co.
NEWARK, N. J., Westinghouse Elec. Sup. Co., Inc.
NEW HAVEN, CONN., Westinghouse Elec.Sup. Co.
NEW ORLEANS, LA., Electrical Supply Co.
NEW YORK, N. Y., Times Appliance Co., Inc.
NEW YORK, N. Y., Westinghouse Elec.Sup.Co.,Inc.
OAKLAND, CALIF., Westinghouse Electric Supply Co.
OKLAHOMA CITY, OKLA., Westinghouse Electric Supply Co.
OMAHA, NEB., Westinghouse Elec. Sup. Co., Inc.
PEORIA, ILL., Westinghouse Elec. Sup. Co., Inc.
PHILADELPHIA, PA., Westinghouse Electric Supply Co.
PHOENIX, ARIZ., Westinghouse Electric Supply Co.
PITTSBURGH, PA., Iron City Electric Co.
PORTLAND, ORE., Westinghouse Elec. Supply Co.
PROVIDENCE, R. I., Wetmore-Savage Elec.Sup. Co.
RALEIGH, N. C., Westinghouse Electric Supply Co.
READING, PA., Westinghouse Elec. Sup. Co.
RICHMOND, VA., Westinghouse Elec. Sup. Co.
ROCHESTER, N. Y., Westinghouse Elec. Sup. Co., Inc.
SALT LAKE CITY, UTAH, Westinghouse Electric Supply Co.
SAN ANTONIO, TEX., Westinghouse Elec.Sup.Co.
SAN FRANCISCO, CALIF., Westinghouse Electric Supply Co.
SCRANTON, PA., Penn. Elec'l. Engineering Co.
SEATTLE, WASH., Westinghouse Elec. Supply Co.
SIOUX CITY, IA., Westinghouse Elec. Sup. Co., Inc.
SPOKANE, WASH., Westinghouse Elec. Sup. Co.
SPRINGFIELD, MASS., Wetmore-Savage Elec. Supply Co.
ST. LOUIS, MO., Westinghouse Elec. Sup. Co.
ST. PAUL, MINN., Westinghouse Electric Supply Co., Inc.
SYRACUSE, N. Y., Westinghouse Elec.Sup.Co.,Inc.
TAMPA, FLA., Westinghouse Electric Supply Co.
TOLEDO, OHIO, Westinghouse Elec. Sup. Co.
TRENTON, N. J., Westinghouse Elec. Sup. Co., Inc.
TULSA, OKLA., Westinghouse Elec. Sup. Co.
UTICA, N. Y., Westinghouse Elec. Sup. Co., Inc.
WASHINGTON, D. C., Westinghouse Electric Supply Co.
WATERLOO, IA., Westinghouse Elec. Sup. Co.,Inc.
WICHITA, KAN., Westinghouse Electric Supply Co.
WILMINGTON, DEL., Westinghouse Elec. Sup. Co.
WORCESTER, MASS., Wetmore-Savage Elec. Sup. Co.
YORK, PA., Westinghouse Elec. Sup. Co.
YOUNGSTOWN, OHIO, Moock Elec. Supply Co.

WESTINGHOUSE SERVICE SHOPS

APPLETON, WIS., 1029 S. Outagamie St.
ATLANTA, GA., 426 Marietta St., N. W.
BALTIMORE, MD., 501 East Preston St.
BOSTON, MASS., 12 Farnsworth St.
BRIDGEPORT, CONN., Bruce Ave. and Seymour St.
BUFFALO, N. Y., 1132 Seneca St.
CHARLOTTE, N. C., 210 E. Sixth St.
CHICAGO, ILL., 2211 W. Pershing Road
CINCINNATI, OHIO, 207 W. Third St.
CLEVELAND, OHIO, 1216 W. 58th St.
DENVER, COLO., 2644 Walnut St.
DETROIT, MICH., 5757 Trumbull Ave.
FAIRMONT, W. VA., 602 Cleveland Ave.
HOUSTON, TEX., 2315 Commerce St.
HUNTINGTON, W. VA., 209 Ninth St.
INDIANAPOLIS, IND., 551 W. Merrill St.
JOHNSTOWN, PA., 47 Messenger St.
KANSAS CITY, MO., 2124 Wyandotte St.
LOS ANGELES, CALIF., 420 S. San Pedro St.
MILWAUKEE, WIS., 1669 N. Water Street
MINNEAPOLIS, MINN., 2303 Kennedy St., N. E.
NEWARK, N. J., Haynes Ave. and Lincoln Highway
NEW YORK, N. Y., 460 W. Thirty-fourth St.
PHILADELPHIA, PA., 3001 Walnut St.
PITTSBURGH, PA., 543 N. Lang Ave.
PORTLAND, OREGON, 2138 N. Interstate Ave.
PROVIDENCE, R. I., 393 Harris Ave.
ROCHESTER, N. Y., 410 Atlantic Ave.
SALT LAKE CITY, UTAH, 346-A Pierpont Ave.
SAN FRANCISCO, CALIF., 1466 Powell Street, Emeryville, Calif.
SEATTLE, WASH., 3451 East Marginal Way
SPRINGFIELD, MASS., 395 Liberty St.
ST. LOUIS, MO., 717 S. Twelfth St.
UTICA, N. Y., 113 N. Genesee St.
WILKES-BARRE, PA., 267 N. Pennsylvania Ave.
WORCESTER, MASS., 32 Southbridge St.

†Change from previous issue.

WESTINGHOUSE ELECTRIC INTERNATIONAL CO.
30 ROCKEFELLER PLAZA, NEW YORK, U. S. A.

Westinghouse Press—Printed in U. S. A.—S. A. J. S.-1—11-34

CANADIAN WESTINGHOUSE CO., Limited
HAMILTON, ONTARIO