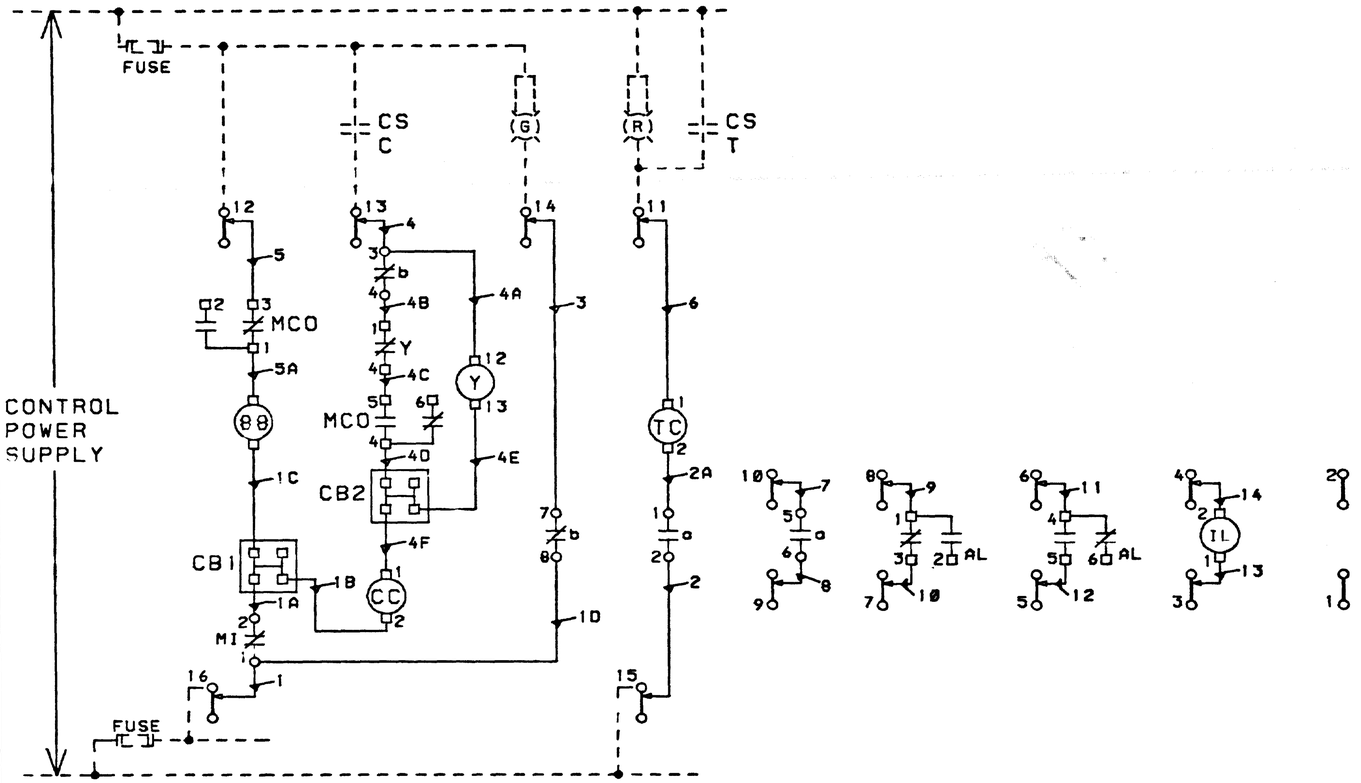

DEVICE LIST

CC	-	CLOSING COIL (SPRING RELEASE)
TC	-	SHUNT TRIP COIL
88	-	SPRING CHARGING MOTOR
MCO	-	MOTOR CUTOFF SWITCH
MI	-	MECHANICAL INTERLOCK
Y	-	CLOSING RELAY, ANTI-PUMP
a	-	AUX. SW.-OPEN WHEN BKR. IS OPEN
b	-	AUX. SW.-CLOSED WHEN BKR. IS OPEN
AL	-	ALARM DEVICE
UV	-	UNDERVOLTAGE TRIP COIL
R	-	RED INDICATION LAMP, BKR. CLOSED
G	-	GREEN INDICATION LAMP, BKR. OPEN
CS/C	-	CONTROL SWITCH, CLOSE CONTACT
CS/T	-	CONTROL SWITCH, TRIP CONTACT
STD	-	STATIC TRIP DEVICE
AS	-	AUXILIARY SWITCH
SD	-	SECONDARY DISCONNECT
CT	-	TRIPPING TRANSFORMER
RC	-	ALARM DEVICE RESET COIL
IL	-	INTERLOCK COIL MUST BE ENERGIZED TO RESET BREAKER TRIP LATCH.

CLASS 'C' WIRING
#14 WIRE SIS, 00-557-286-341
#18 WIRE SIS, 00-557-286-003

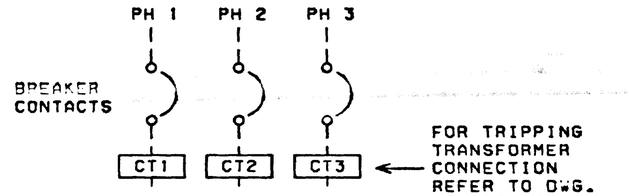

WIRE CHART				
WIRE	TERMINALS		SIZE	
1	SD16	MI1	18	HARNESS 18-398-289-505
1D	MI1	AS8	18	
1A	MI2	CB1	18	
1B	CC2	CB1	18	
2	SD15	AS2	18	
2A	TC2	AS1	18	
3	SD14	AS7	18	
4	SD13	AS3	18	
4A	Y12	AS3	18	
4B	Y1	AS4	18	
4C	Y4	MCO5	18	
4D	MCO4	CB2	18	
4E	Y13	CB2	18	
4F	CC1	CB2	18	
5	SD12	MCO3	18	
6	SD11	TC1	18	
7	SD10	AS5	14	
8	SD9	AS6	14	
9	SD8	AL1	18	
10	SD7	AL3	18	
11	SD6	AL4	18	
12	SD5	AL5	18	
13	SD3	IL1	18	
14	SD4	IL2	18	

DEVICE LEAD WIRES		
WIRE	TERMINALS	
88-1(5A)	88	MCO1
88-2(1C)	88	CB1

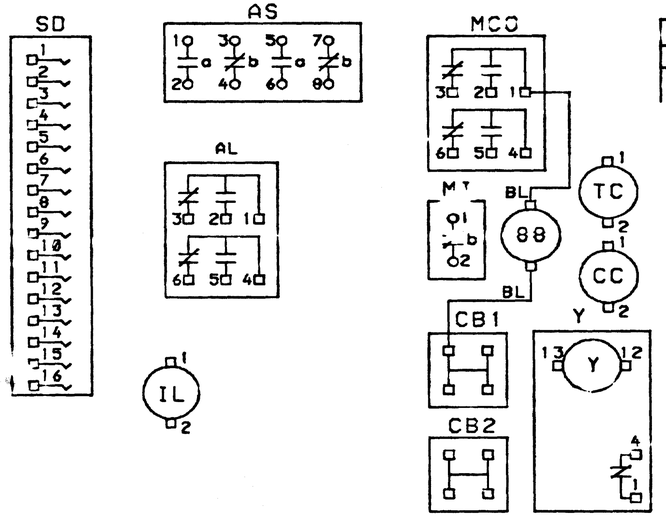

□ - SINGLE FASTON TAB, ONE CONNECTION ONLY
o - MULTIPLE CONNECTIONS POSSIBLE

ALL REVISIONS MUST BE MADE ON CAD SYSTEM.

02	12/01/91	WIRE ID WAS 1C	MT
01	08/02/85	3 WIRE AUX SW (1a) BELL ALARM (DP-1NO,1NC) IL COIL	

CAD MT
DRAWN JME
CHECK
APVD
PRODUCT TYPE RL

Siemens Energy & Automation, Inc.

DWG NAME
ELECTRICALLY OPERATED AIR CIRCUIT BREAKER WIRING DIAGRAM

SIZE	FSCM NO.	DWG NO.	ISSUE
B		18-738-602-445	02

SCALE: NTS WT SHEET 1 OF 1