

WIRE NO.	FROM	TO	SIZE
C1	CT1-Y	STD1	18
C2	CT2-Y	STD2	18
C3	CT3-Y	STD3	18
C0	CT1-G	CT2-G	18
C0	CT2-G	CT3-G	18
C0	CT3-G	STD4	18
TA1	RED	STD7	*
TA2	BLACK	STD6	*
TA3	BLUE	STD8	*

* DEVICE LEADS

FIGURE A

STATIC TRIP III '3W' OR '3WG' 1 WINDING

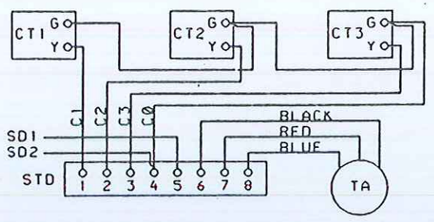

WIRE NO.	FROM	TO	SIZE
C1	CT1-Y	STD1	18
C2	CT2-Y	STD2	18
C3	CT3-Y	STD3	18
C0	CT1-G	CT2-G	18
C0	CT2-G	CT3-G	18
C0	CT3-G	STD4	18
15	STD4	SD2	18
16	STD5	SD1	18
TA1	RED	STD7	*
TA2	BLACK	STD6	*
TA3	BLUE	STD8	*

* DEVICE LEADS

FIGURE B

STATIC TRIP III '4WR' 1 WINDING

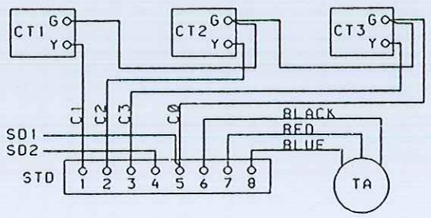

WIRE NO.	FROM	TO	SIZE
C1	CT1-Y	STD1	18
C2	CT2-Y	STD2	18
C3	CT3-Y	STD3	18
C0	CT1-G	CT2-G	18
C0	CT2-G	CT3-G	18
C0	CT3-G	STD5	18
15	STD4	SD2	18
16	STD5	SD1	18
TA1	RED	STD7	*
TA2	BLACK	STD6	*
TA3	BLUE	STD8	*

* DEVICE LEADS

FIGURE C

STATIC TRIP III '4WD'

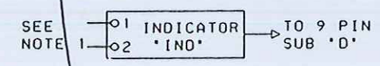

FIGURE D

'LOAD INDICATOR WIRING'

NOTE 1: FOR INDICATOR WIRING TO SEC. DISC. SEE ACB WIRING DIAGRAM.

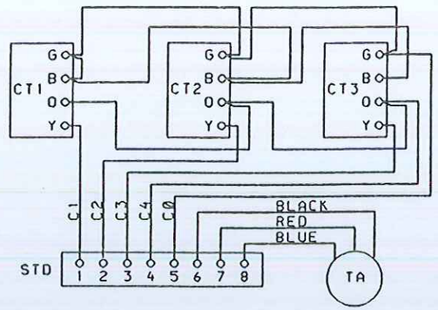

WIRE NO.	FROM	TO	SIZE
C1	CT1-Y	STD1	18
C2	CT2-Y	STD2	19
C3	CT3-Y	STD3	18
CO	CT3-B	CT2-B	18
CO	CT2-B	CT1-B	18
CO	CT1-B	CT1-G	18
C0	CT1-G	CT2-G	18
C0	CT2-G	CT3-G	18
C0	CT3-G	STD5	18
C4	CT1-O	CT2-O	18
C4	CT2-O	CT3-O	18
C4	CT3-O	STD4	18
TA1	RED	STD7	*
TA2	BLACK	STD6	*
TA3	BLUE	STD8	*

* DEVICE LEADS

FIGURE E

STATIC TRIP III '3WG' NEC 1200A 2 WINDING

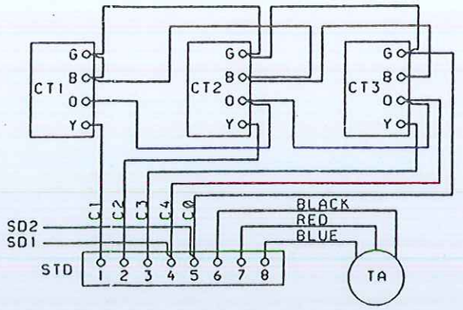

WIRE NO.	FROM	TO	SIZE
C1	CT1-Y	STD1	18
C2	CT2-Y	STD2	18
C3	CT3-Y	STD3	18
CO	CT3-B	CT2-B	18
CO	CT2-B	CT1-B	18
CO	CT1-B	CT1-G	18
C0	CT1-G	CT2-G	18
C0	CT2-G	CT3-G	18
C0	CT3-G	STD5	18
15	STD5	SD2	18
C4	CT1-O	CT2-O	18
C4	CT2-O	CT3-O	18
C4	CT3-O	STD4	18
16	STD4	SD1	18
TA1	RED	STD7	*
TA2	BLACK	STD6	*
TA3	BLUE	STD8	*

* DEVICE LEADS

FIGURE F

STATIC TRIP III '4WR' NEC 1200A 2 WINDING

1 WINDING DIAGRAMS ARE FOR ALL SIZE BREAKERS WITH TRIPPING TRANSFORMERS PER 61-300-053-5___.

2 WINDING DIAGRAMS ARE FOR RL3200 AND RL4000 BREAKERS WITH STATIC TRIP III AND TRIPPING TRANSFORMERS PER 61-300-059-5__ TO MEET NEC 1200A. MAX. GROUND FAULT SETTING.

FOR '4WD' USE MARK 412 OR 415.

STANDARD DRAWING
DO NOT DESTROY, CHANGE OR ADD MARK NO'S W/O APPROVAL OF DESIGN ENGINEERING.

MK 412

NO.	DATE	
12	04/20/92	REVISED DWG NUMBER ECO LV9205B1
11	03-19-91	SEE SHEET 4 OF 5 ECO LV 9102-B1
10	01-02-91	ADD MK 460 - 473 SHEETS 2 THROUGH 5 REFORMATED AND REDRAWN. SHEETS 6, 7 & 8 DELETED. ECO LV 9102-B1
09	11-08-88	ADD SHEETS 7 & 8 09-12-89 SPS
08	04-07-88	ECO LV8810-B4
		ECO LV8803-B3 SPS
07	07-30-87	DRAWING REDRAWN WIRE 15 WAS CO & WENT FROM STD5 TO SD1. WIRE 16 WAS C4 & WENT FROM STD4 TO SD2 ON MK 421 & MK 423. REMOVED INDICATOR WIRES FROM CHART FOR MK 422 & 423 SPS

☐ PRELIMINARY
☐ APPROVAL
☒ CERTIFIED

SHIP ORD
MFG ORD
MFG ORD

CUSTOMER STANDARD DRAWING
LOCATION
GROUP
CUST ORDER

DRAWN L. WHITSITT
CHECK R. HAGEVIK
APVD S. SLATTERY

PRODUCT TYPE: RL

Siemens Energy & Automation, Inc.
SWITCHGEAR DIVISION

DWG NAME: CONNECTION DIAGRAMS FOR STATIC TRIP III DEVICE

SIZE	FSCM NO.	DWG NO.	ISSUE
B		18-738-600-487 T	12

SCALE | WT | SHEET 3 OF 5

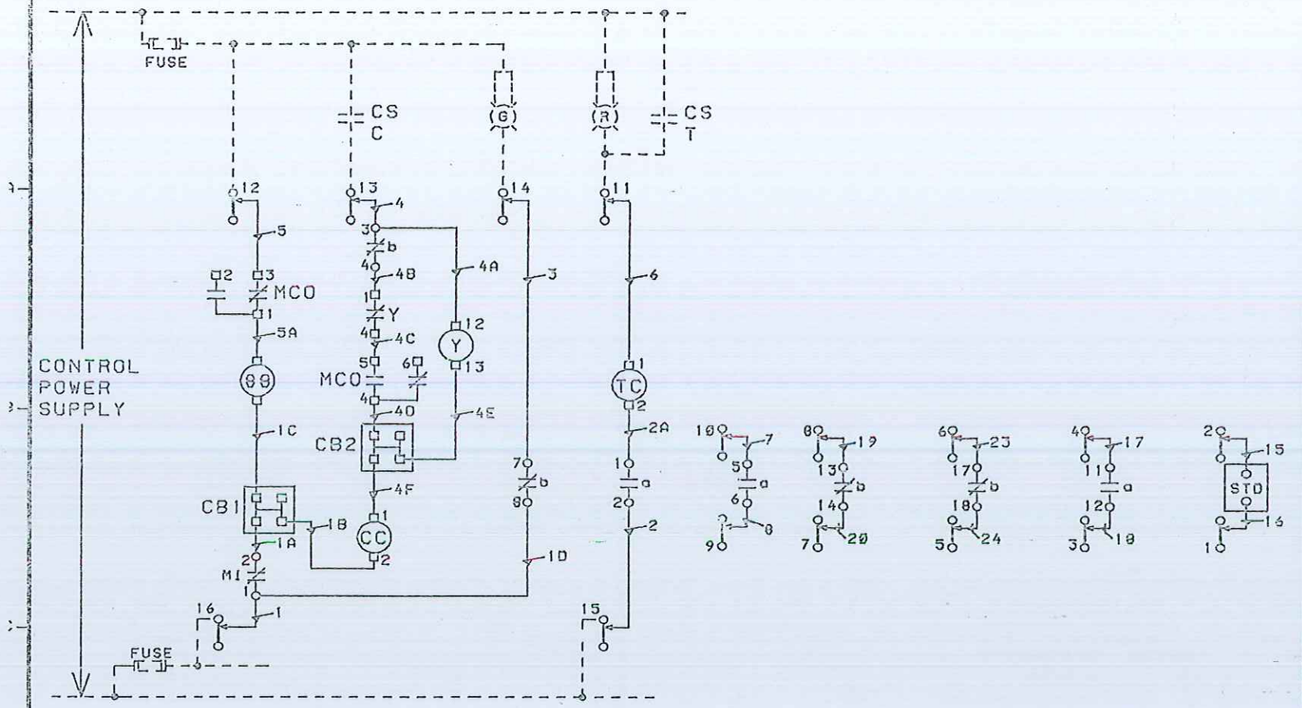

DEVICE LIST

CC	-	CLOSING COIL (SPRING RELEASE)
TC	-	SHUNT TRIP COIL
88	-	SPRING CHARGING MOTOR
MCO	-	MOTOR CUTOFF SWITCH
MI	-	MECHANICAL INTERLOCK
Y	-	CLOSING RELAY, ANTI-PUMP
a	-	AUX. SW.-OPEN WHEN BKR. IS OPEN
b	-	AUX. SW.-CLOSED WHEN BKR. IS OPEN
AL	-	ALARM DEVICE
UV	-	UNDERVOLTAGE TRIP COIL
R	-	RED INDICATION LAMP, BKR. CLOSED
G	-	GREEN INDICATION LAMP, BKR. OPEN
CS/C	-	CONTROL SWITCH, CLOSE CONTACT
CS/T	-	CONTROL SWITCH, TRIP CONTACT
STD	-	STATIC TRIP DEVICE
AS	-	AUXILIARY SWITCH
SD	-	SECONDARY DISCONNECT
CT	-	TRIPPING TRANSFORMER
RC	-	ALARM DEVICE RESET COIL

NOTE 1:
CONTACT DESIGNATIONS FOR WIRES 15 & 16 ARE FOUND ON TRIP W/O 18-738-600-4Ⓣ

.CLASS 'C' WIRING
#14 WIRE SIS, 00-557-204-341
#18 WIRE SIS, 00-557-204-003

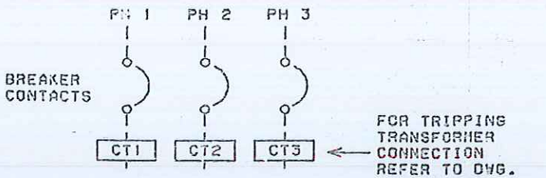

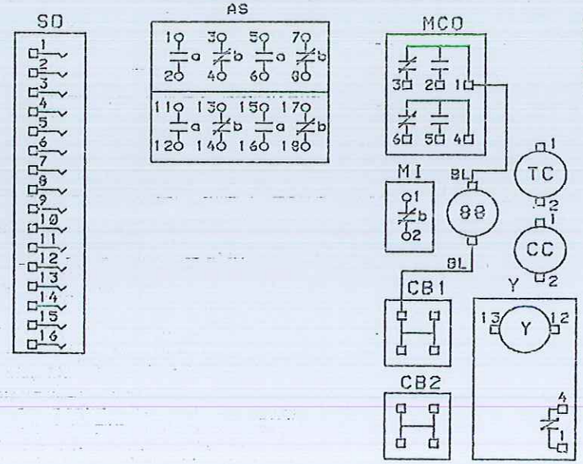

□ - SINGLE FASTON TAB, ONE CONNECTION ONLY
○ - MULTIPLE CONNECTIONS POSSIBLE

WIRE CHART

WIRE	TERMINALS		SIZE
1	SD16	MI1	18
10	MI1	AS8	18
1A	MI2	CB1	18
1B	CC2	CB1	18
2	SD15	AS2	18
2A	TC2	AS1	18
3	SD14	AS7	18
4	SD13	AS3	18
4A	Y12	AS3	18
4B	Y1	AS4	18
4C	Y4	MCO5	18
4D	MCO4	CB2	18
4E	Y13	CB2	18
4F	CC1	CB2	18
5	SD12	MCO3	18
6	SD11	TC1	18
7	SD10	AS5	14
8	SD9	AS6	14
15	SD2	SEE NOTE 1 ⚠	
16	SD1	SEE NOTE 1 ⚠	
17	SD4	AS11	14
18	SD3	AS12	14
19	SD8	AS13	14
20	SD7	AS14	14
23	SD4	AS17	14
24	SD5	AS18	14

HARNESS 18-738-269-555

DEVICE LEAD WIRES

WIRE	TERMINALS	
88-1(5A)	88	MCO1
88-2(1C)	88	CB1

ALL REVISIONS MUST BE MADE ON CAD SYSTEM.

04	12/01/98	MT	WIRE 4B WAS Y3 WIRE 4C WAS Y6 DELETED HEAT SHRINK TUBING NOTE WIRE 1D WAS 1
03	04/22/88		⚠ WAS STD4,STD9 ADDED NOTE 1 ECO LV8803-B3
02	04/05/88		WIRE 4B WAS Y1 WIRE 4C WAS Y4 ECO LV8803-B12
01	08/14/87		ADDED NOTE AT F-2

4 WIRE
AUX SW (2a,2b)
8 STAGE AUX SW

CAD MT
DRAWN PCS
CHECK
APVD

PRODUCT TYPE: RL

Siemens Energy & Automation, Inc.

DWG NAME: ELECTRICALLY OPERATED AIR CIRCUIT BREAKER WIRING DIAGRAM

SIZE	FSCM NO.	DWG NO.	ISSUE
B		18-738-602-456	04

SCALE: NTS WT SHEET 1 OF 1