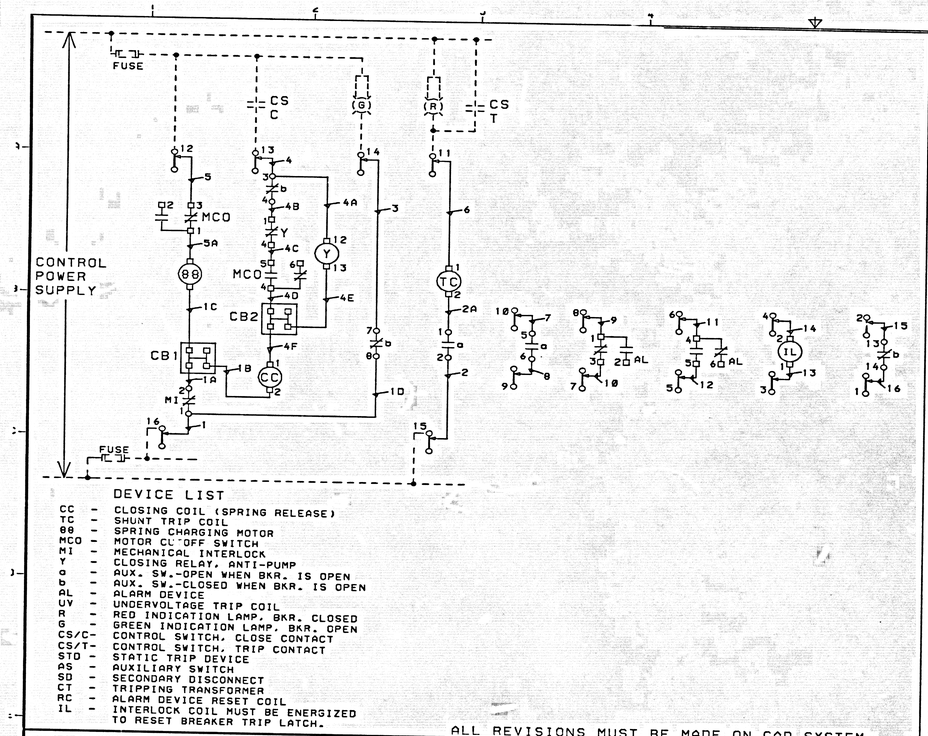

DEVICE LIST

CC - CLOSING COIL (SPRING RELEASE)
TC - SHUNT TRIP COIL
88 - SPRING CHARGING MOTOR
MCO - MOTOR CUTOFF SWITCH
MI - MECHANICAL INTERLOCK
Y - CLOSING RELAY, ANTI-PUMP
a - AUX. SW.-OPEN WHEN BKR. IS OPEN
b - AUX. SW.-CLOSED WHEN BKR. IS OPEN
AL - ALARM DEVICE
UV - UNDERVOLTAGE TRIP COIL
R - RED INDICATION LAMP, BKR. CLOSED
G - GREEN INDICATION LAMP, BKR. OPEN
CS/C- CONTROL SWITCH, CLOSE CONTACT
CS/T- CONTROL SWITCH, TRIP CONTACT
STD - STATIC TRIP DEVICE
AS - AUXILIARY SWITCH
SD - SECONDARY DISCONNECT
CT - TRIPPING TRANSFORMER
RC - ALARM DEVICE RESET COIL
IL - INTERLOCK COIL MUST BE ENERGIZED TO RESET BREAKER TRIP LATCH.

CLASS 'C' WIRING
#14 WIRE SIS. 00-557-286-341
#10 WIRE SIS. 00-557-286-003

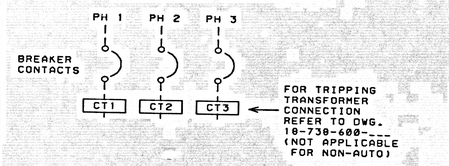

FOR TRIPPING TRANSFORMER CONNECTION REFER TO DWG. 10-730-600-____ (NOT APPLICABLE FOR NON-AUTO)

WIRE CHART

WIRE	TERMINALS		SIZE
1	SD16	MI1	18
1D	MI1	AS8	18
1A	MI2	CB1	18
1B	CC2	CB1	18
2	SD15	AS2	18
2A	TC2	AS1	18
3	SD14	AS7	18
4	SD13	AS3	18
4A	Y12	AS3	18
4B	Y1	AS4	18
4C	Y4	MCO5	18
4D	MCO4	CB2	18
4E	Y13	CB2	18
4F	CC1	CB2	18
5	SD12	MCO3	18
6	SD11	TC1	18
7	SD10	AS5	14
8	SD9	AS6	14
9	SD8	AL1	18
10	SD7	AL3	18
11	SD6	AL4	18
12	SD5	AL5	18
13	SD3	IL1	18
14	SD4	IL2	18
15	SD2	AS13	18
16	SD1	AS14	18

HARNESS 18-398-289-505

DEVICE LEAD WIRES

WIRE	TERMINALS	
00-1(5A)	00	MCO1
00-2(1C)	00	CB1

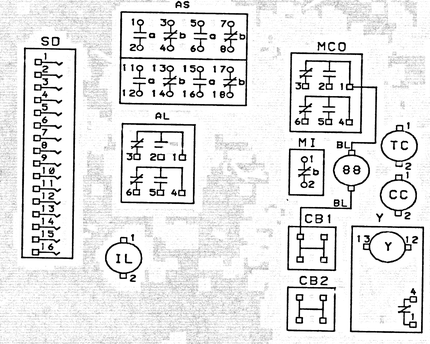

□ - SINGLE FASTON TAB, ONE CONNECTION ONLY
○ - MULTIPLE CONNECTIONS POSSIBLE

ALL REVISIONS MUST BE MADE ON CAD SYSTEM.

0	11/15/91	3 WIRE AUX SW (1a,1b) BELL ALARM (DP-IND,INC) IL COIL 8 STAGE AUX SW

DRAWN MT
CHECK
APVD

PRODUCT TYPE
RL

Siemens Energy & Automation, Inc.

DWG NAME
ELECTRICALLY OPERATED AIR CIRCUIT BREAKER WIRING DIAGRAM

SIZE	FSCM NO.	DWG NO.	ISSUE
B		18-751-067-408	01

SCALE: NTS WT SHEET 1 OF 1