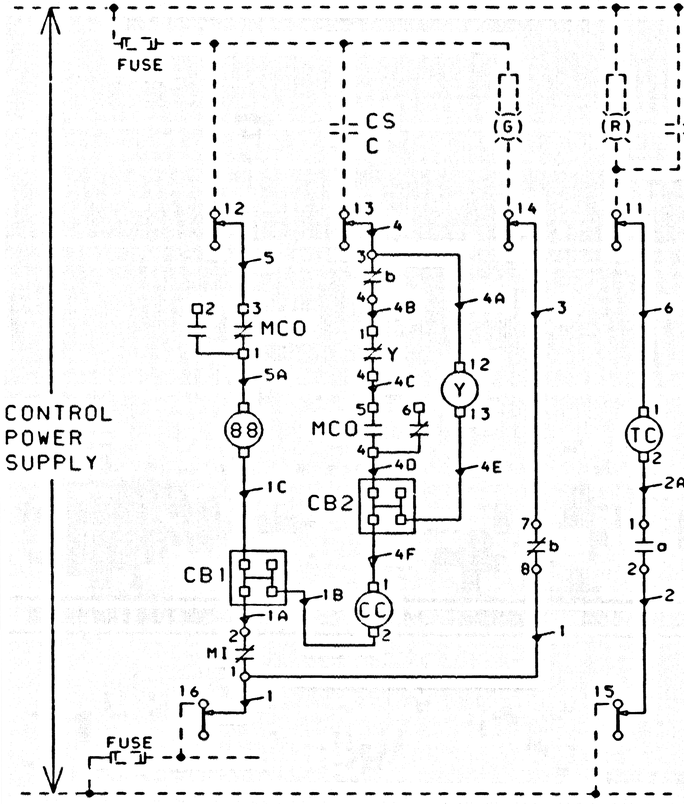

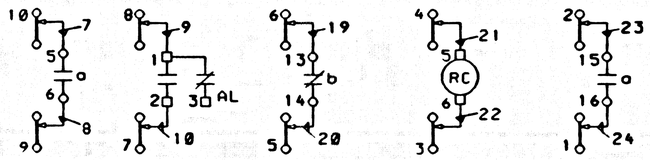

DEVICE LIST

CC	-	CLOSING COIL (SPRING RELEASE)
TC	-	SHUNT TRIP COIL
88	-	SPRING CHARGING MOTOR
MCO	-	MOTOR CUTOFF SWITCH
MI	-	MECHANICAL INTERLOCK
Y	-	CLOSING RELAY, ANTI-PUMP
a	-	AUX. SW.-OPEN WHEN BKR. IS OPEN
b	-	AUX. SW.-CLOSED WHEN BKR. IS OPEN
AL	-	ALARM DEVICE
UV	-	UNDERVOLTAGE TRIP COIL
R	-	RED INDICATION LAMP, BKR. CLOSED
G	-	GREEN INDICATION LAMP, BKR. OPEN
CS/C	-	CONTROL SWITCH, CLOSE CONTACT
CS/T	-	CONTROL SWITCH, TRIP CONTACT
STD	-	STATIC TRIP DEVICE
AS	-	AUXILIARY SWITCH
SD	-	SECONDARY DISCONNECT
CT	-	TRIPPING TRANSFORMER
RC	-	ALARM DEVICE RESET COIL

CLASS 'C' WIRING
#14 WIRE SIS. 00-557-296-341
#18 WIRE SIS. 00-557-296-003

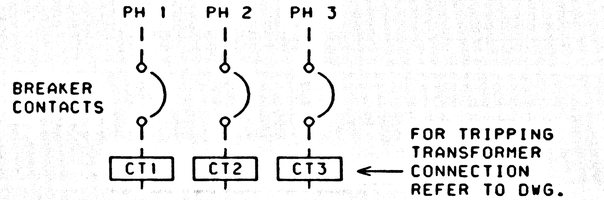

WIRE CHART				
WIRE	TERMINALS		SIZE	HARNESS 18-398-289-505
1	SD16	MI1	18	
1D	MI1	AS8	18	
1A	MI2	CB1	18	
1B	CC2	CB1	18	
2	SD15	AS2	18	
2A	TC2	AS1	18	
3	SD14	AS7	18	
4	SD13	AS3	18	
4A	Y12	AS3	18	
4B	Y1	AS4	18	
4C	Y4	MCO5	18	
4D	MCO4	CB2	18	
4E	Y13	CB2	18	
4F	CC1	CB2	18	
5	SD12	MCO3	18	
6	SD11	TC1	18	
7	SD10	AS5	14	
8	SD9	AS6	14	
9	SD8	AL1	18	
10	SD7	AL2	18	
19	SD6	AS13	14	
20	SD5	AS14	14	
21	SD4	AL5	18	
22	SD3	AL6	18	
23	SD2	AS15	14	
24	SD1	AS16	14	

DEVICE LEAD WIRES		
WIRE	TERMINALS	
88-1(5A)	88	MCO1
88-2(1C)	88	CB1

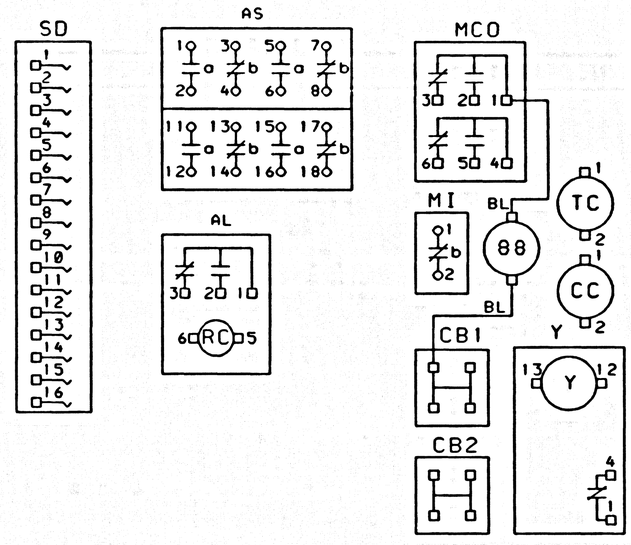

□ - SINGLE FASTON TAB, ONE CONNECTION ONLY
o - MULTIPLE CONNECTIONS POSSIBLE

ALL REVISIONS MUST BE MADE ON CAD SYSTEM.

REV	DATE	DESCRIPTION
02	04/24/92	ALARM WIRE SIZE WAS 14 WT
01	04/21/92	3 WIRE AUX SW (2a,1b) BELL ALARM (SP-1NO) 8 STAGE AUX SW ALARM DEVICE RESET COIL

DRAWN MT
CHECK
APVD
PRODUCT TYPE RL

Siemens Energy & Automation, Inc.

DWG NAME
ELECTRICALLY OPERATED AIR CIRCUIT BREAKER WIRING DIAGRAM

SIZE	FSCM NO.	DWG NO.	ISSUE
B		18-751-067-417	02

SCALE: NTS WT SHEET 1 OF 1