STATIC TRIP III "3W" OR "3WG"
NO GROUND FAULT OR WITH GROUND FAULT
NO NEUTRAL METERING
1 WINDING

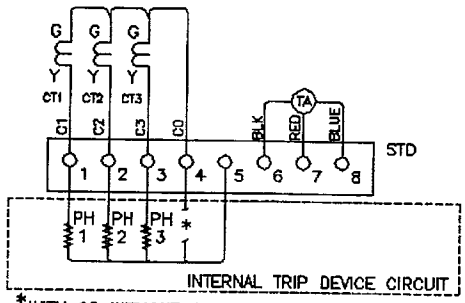

*WITH OR WITHOUT GRD. ELEMENT

WIRE NO.	FROM	TO	WIRE
C1	CT1-Y	STD-1	18
C2	CT2-Y	STD-2	18
C3	CT3-Y	STD-3	18
C0	CT1-G	CT2-G	18
C0	CT2-G	CT3-G	18
C0	CT3-G	STD-4	18
TA1	RED	STD-7	+
TA2	BLACK	STD-6	+
TA3	BLUE	STD-8	+

1A

STATIC TRIP III "4WN"
NO GROUND FAULT
WITH NEUTRAL METERING
1 WINDING

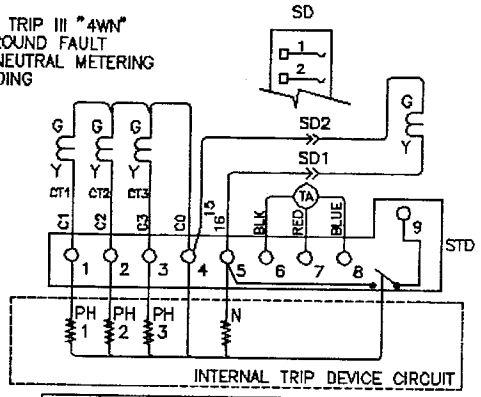

WIRE NO.	FROM	TO	WIRE
C1	CT1-Y	STD-1	18
C2	CT2-Y	STD-2	18
C3	CT3-Y	STD-3	18
C0	CT1-G	CT2-G	18
C0	CT2-G	CT3-G	18
C0	CT3-G	STD-4	18
15	STD-4	SD-2	18
16	STD-5	SD-1	18
TA1	RED	STD-7	+
TA2	BLACK	STD-6	+
TA3	BLUE	STD-8	+

1B

+ DEVICE LEADS

DEVICE LIST
CT1 - CURRENT SENSOR PHASE 1 (OR) A
SD - SECONDARY DISCONNECT
STD - STATIC TRIP DEVICE
TA - TRIP ACTUATOR

STANDARD DRAWING
DO NOT DESTROY, CHANGE OR ADD MARK NO'S W/O APPROVAL OF DESIGN ENGINEERING.

USED ON 2R

* CAD GENERATED, DO NOT CHANGE MANUALLY.

REV	REVISED PER DWG 9310-32	07-30-94	RCV
02		08-23-93	AHT
01	UPDATED WIRING DIAG.	07-06-93	

Confidential-Property of
Siemens Energy & Automation, Inc.
Electrical Apparatus Division

1-PLACE DECIMAL ± .06
2-PLACE DECIMAL ± .03
3-PLACE DECIMAL ± .01
ANGULAR
MACHINED SURFACE TEXTURE
SIMILAR TO
DR AHT
CH SEM
APP
BULLETIN 07/94
DATA BASE \R\BKR\8M280YW

MATERIAL FIG. [1A], [1B]

N-C 2	CURRENT DATE 3-8	PART NUMBER 9-18	ISS 20-21
C	07-30-94	18-748-279-400	03

TYPE 22	REP 23	PART NAME 24-43	N.N. 44-48	49-53	SCALE	CHARACTERISTICS	SHEET NO.
		STANDARD CONNECTION DIAGRAMS FOR STATIC TRIP III DEVICE			NONE		1-24

D:\RLTEMP\1ABC

STATIC TRIP III "3WR–NEC"
WITH GROUND FAULT
NO NEUTRAL METERING
*2 WINDING (DUAL)

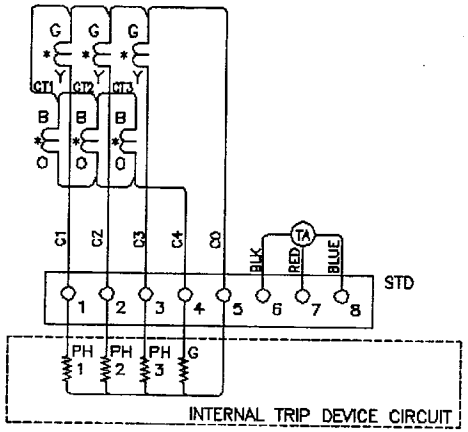

INTERNAL TRIP DEVICE CIRCUIT

WIRE NO.	FROM	TO	WIRE
C1	CT1–Y	STD–1	18
C2	CT2–Y	STD–2	18
C3	CT3–Y	STD–3	18
CO	CT3–B	CT2–B	18
CO	CT2–B	CT1–B	18
CO	CT1–B	CT1–G	18
CO	CT1–G	CT2–G	18
CO	CT2–G	CT3–G	18
CO	CT3–G	STD–5	18

WIRE NO.	FROM	TO	WIRE
C4	CT1–O	CT2–O	18
C4	CT2–O	CT3–O	18
C4	CT3–O	STD–4	18
TA1	RED	STD–7	+
TA2	BLACK	STD–6	+
TA3	BLUE	STD–8	+

1C

STATIC TRIP III "4WR"
WITH GROUND FAULT
NO NEUTRAL METERING
1 WINDING

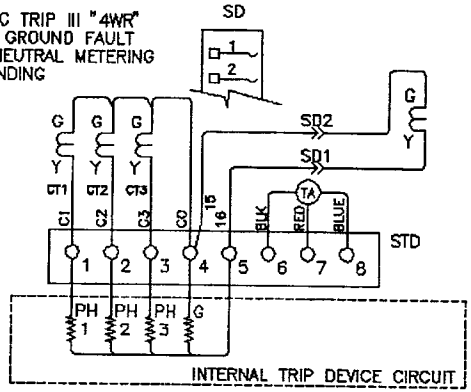

INTERNAL TRIP DEVICE CIRCUIT

WIRE NO.	FROM	TO	WIRE
C1	CT1–Y	STD–1	18
C2	CT2–Y	STD–2	18
C3	CT3–Y	STD–3	18
CO	CT1–G	CT2–G	18
CO	CT2–G	CT3–G	18
CO	CT3–G	STD–4	18
15	STD–4	SD–2	18
16	STD–5	SD–1	18
TA1	RED	STD–7	+
TA2	BLACK	STD–6	+
TA3	BLUE	STD–8	+

1D

STATIC TRIP III "4WR–NEC"
WITH GROUND FAULT
NO NEUTRAL METERING
*2 WINDING (DUAL)

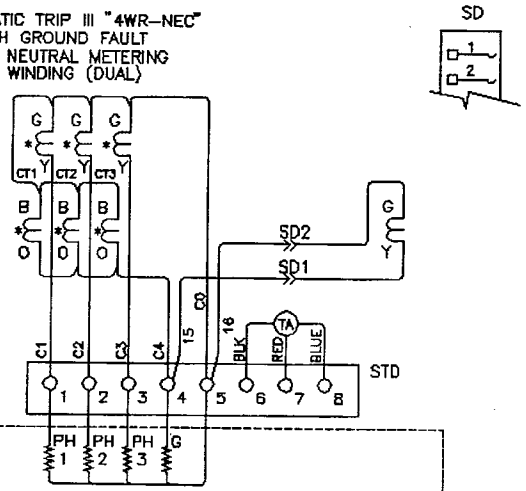

INTERNAL TRIP DEVICE CIRCUIT

WIRE NO.	FROM	TO	WIRE
C1	CT1–Y	STD–1	18
C2	CT2–Y	STD–2	18
C3	CT3–Y	STD–3	18
CO	CT3–B	CT2–B	18
CO	CT2–B	CT1–B	18
CO	CT1–B	CT1–G	18
CO	CT1–G	CT2–G	18
CO	CT2–G	CT3–G	18
CO	CT3–G	STD–5	18

WIRE NO.	FROM	TO	WIRE
16	STD–5	SD–2	18
C4	CT1–O	CT2–O	18
C4	CT2–O	CT3–O	18
C4	CT3–O	STD–4	18
15	STD–4	SD–1	18
TA1	RED	STD–7	+
TA2	BLACK	STD–6	+
TA3	BLUE	STD–8	+

1E

\+ DEVICE LEADS

DEVICE LIST
CT1 – CURRENT SENSOR PHASE 1 (OR) A
SD – SECONDARY DISCONNECT
STD – STATIC TRIP DEVICE
TA – TRIP ACTUATOR

STANDARD DRAWING
DO NOT DESTROY, CHANGE OR ADD MARK NO'S W/O APPROVAL OF DESIGN ENGINEERING.

USED ON 2R

* CAD GENERATED, DO NOT CHANGE MANUALLY.

SEE SHEET #1. 01 07-06-93

Confidential–Property of
Siemens Energy & Automation, Inc.
Electrical Apparatus Division

1–PLACE DECIMAL ± .06
2–PLACE DECIMAL ± .03
3–PLACE DECIMAL ± .01
ANGULAR
MACHINED SURFACE TEXTURE
SIMILAR TO
DR AHT
CH SEM
APP
BULLETIN 07/94
DATA BASE \RIBKR\8M280YW

MATERIAL FIG. [1C], [1D], [1E]

N–C 2	CURRENT DATE 3–5	PART NUMBER 9–19	ISS 20–21
C	07–30–94	18–748–279–400	03

TYPE 22	REP 23	PART NAME 24–43	N.M. 44–48	49–53	SCALE	CHARACTERISTICS	SHEET NO.
		STANDARD CONNECTION DIAGRAMS FOR STATIC TRIP III DEVICE			NONE		2–24

O:\RLTEMP\1DEF

STATIC TRIP III "4WD"
WITH GROUND FAULT
NO NEUTRAL METERING
1 WINDING

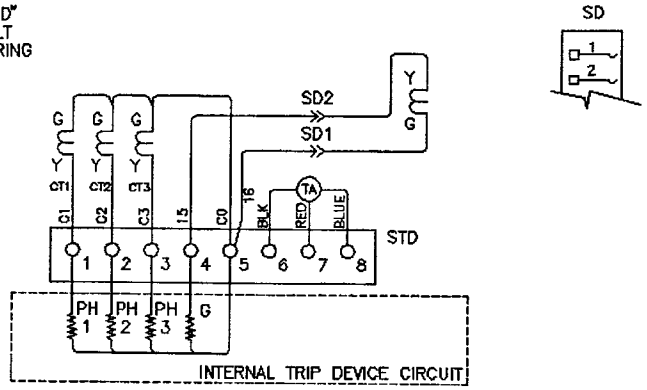

WIRE NO.	FROM	TO	WIRE
C1	CT1–Y	STD–1	18
C2	CT2–Y	STD–2	18
C3	CT3–Y	STD–3	18
C0	CT1–G	CT2–G	18
C0	CT2–G	CT3–G	18
C0	CT3–G	STD–5	18
15	STD–4	SD–2	18
16	STD–5	SD–1	18
TA1	RED	STD–7	+
TA2	BLACK	STD–6	+
TA3	BLUE	STD–8	+

1F

STATIC TRIP III "4WRN"
WITH GROUND FAULT
WITH NEUTRAL METERING
1 WINDING

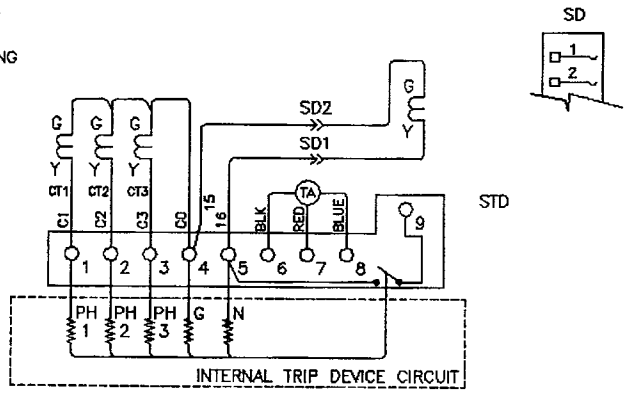

WIRE NO.	FROM	TO	WIRE
C1	CT1–Y	STD–1	18
C2	CT2–Y	STD–2	18
C3	CT3–Y	STD–3	18
C0	CT1–G	CT2–G	18
C0	CT2–G	CT3–G	18
C0	CT3–G	STD–4	18
15	STD–4	SD–2	18
16	STD–5	SD–1	18
TA1	RED	STD–7	+
TA2	BLACK	STD–6	+
TA3	BLUE	STD–8	+

1G

+ DEVICE LEADS

DEVICE LIST
CT1 – CURRENT SENSOR PHASE 1 (OR) A
SD – SECONDARY DISCONNECT
STD – STATIC TRIP DEVICE
TA – TRIP ACTUATOR
TC – SHUNT TRIP COIL

STANDARD DRAWING
DO NOT DESTROY, CHANGE OR ADD MARK NO'S W/O APPROVAL OF DESIGN ENGINEERING.

USED ON: 2R:

* CAD GENERATED, DO NOT CHANGE MANUALLY.

SEE SHEET #1.

01 07-06-93

Confidential–Property of
Siemens Energy & Automation, Inc.
Electrical Apparatus Division

1-PLACE DECIMAL ± .06
2-PLACE DECIMAL ± .03
3-PLACE DECIMAL ± .01
ANGULAR
MACHINED SURFACE TEXTURE
SIMILAR TO
DR AHT
CH SEN
APP
BULLETIN 07/94
DATA BASE \R\BKR\8M280YW

MATERIAL FIG. [1F], [1G]

N-C 2: C
CURRENT DATE 3-8: 07-30-94
PART NUMBER 9-19: 18-748-279-400
ISS 20-21: 03

TYPE 22
REP 23
PART NAME 24-43: STANDARD CONNECTION DIAGRAMS FOR STATIC TRIP III DEVICE
N.M. 44-48
49-53
SCALE: NONE
CHARACTERISTICS
SHEET NO. 3-24

O:\RLTEMP\1GH

STATIC TRIP III-C
COMMUNICATION HARNESS

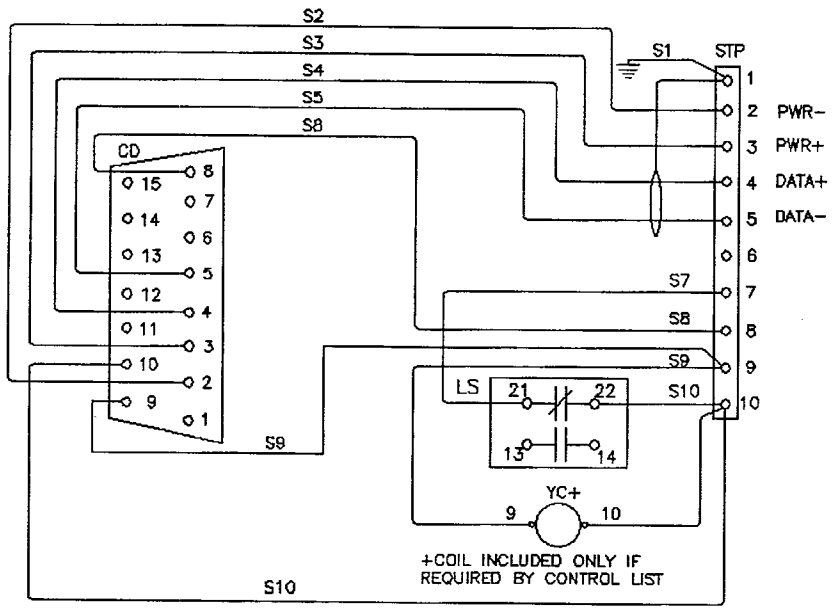

2A

WIRE NO.	FROM	TO	SIZE
S1	STP-1	FRAME	18
S2	STP-2	CD-2	22
S3	STP-3	CD-3	22
S4	STP-4	CD-4	
S5	STP-5	CD-5	
SHLD	TERM	SHIELD ●	STP-1
S7	STP-7	LS-21	22
S8	STP-8	CD-8	22
S9	STP-9	CD-9	22
S9	STP-9	YC-9	22
S10	STP-10	LS-22	22
S10	STP-10	CD-10	22
S10	STP-10	YC-10	22

SHLD 2/C B W

DEVICE LEGEND
STP – STATIC TRIP PORT
LS – LIMIT SWITCH
CD – COMMUNICATION DISCONNECT
YC – REMOTE CLOSE RELAY
PWR – POWER SUPPLY INPUT
DATA – COMMUNICATION DATA TERMINALS

STANDARD DRAWING
DO NOT DESTROY, CHANGE OR ADD MARK NO'S W/O APPROVAL OF DESIGN ENGINEERING.

USED ON 2R

* CAD GENERATED, DO NOT CHANGE MANUALLY.

SEE SHEET #1.

01 07-06-03

Confidential-Property of
Siemens Energy & Automation, Inc.
Electrical Apparatus Division

1-PLACE DECIMAL ± .06
2-PLACE DECIMAL ± .03
3-PLACE DECIMAL ± .01
ANGULAR
MACHINED SURFACE TEXTURE
SIMILAR TO
DR AHT
CH SEM
APP
BULLETIN 07/94
DATA BASE \R\BKR\8M280YW

MATERIAL FIG. [2A]

N-C 2	CURRENT DATE 3-8	PART NUMBER 9-19	ISS 20-21
C	07-30-94	18-748-279-400	03

TYPE 22	REP 23	PART NAME 24-43	N.M. 44-48	49-53	SCALE	CHARACTERISTICS	SHEET NO.
		STANDARD CONNECTION DIAGRAMS FOR STATIC TRIP III DEVICE			NONE		4-24

STATIC TRIP III – CP
COMMUNICATION AND POWER METERING
WIRE HARNESS
3 PH. 3 WIRE

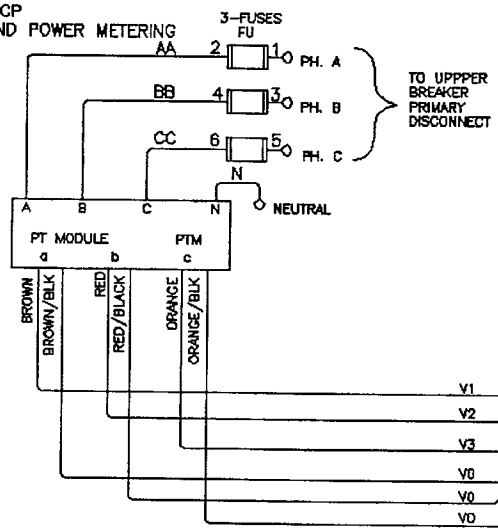

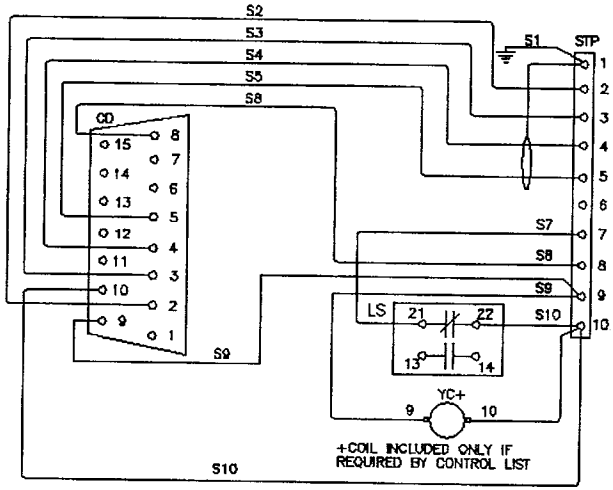

WIRE NO.	FROM	TO	SIZE
A	PH–A	FU–1	14
B	PH–B	FU–3	14
C	PH–C	FU–5	14
AA	FU–2	PTM–A	+
BB	FU–4	PTM–B	+
CC	FU–6	PTM–C	+

+DEVICE LEADS

WIRE NO.	FROM	TO	COLOR
N	NEUT	PTM–N	
V1	PTM–a	STV–1	BROWN
V2	PTM–b	STV–2	BRN/BLK
V3	PTM–c	STV–3	RED
V0	PTM–a	STV–4	RED/BLK
V0	PTM–b	STV–4	ORANGE
V0	PTM–c	STV–4	OR/BLK

WIRE NO.	FROM	TO	SIZE
S1	STP–1	FRAME	18
S2	STP–2	CD–2	22
S3	STP–3	CD–3	22
S4	STP–4	CD–4	
S5	STP–5	CD–5	
SHLD	TERM	SHIELD @ STP–1	

SHLD 2/C B W

WIRE NO.	FROM	TO	SIZE
S7	STP–7	LS–21	22
S8	STP–8	CD–8	22
S9	STP–9	CD–9	22
S9	STP–9	YC–9	22
S10	STP–10	LS–22	22
S10	STP–10	CD–10	22
S10	STP–10	YC–10	22

2B

DEVICE LIST
FU – POWER FUSE
PH – PHASE VOLTAGE
PTM – POTENTIAL TRANSFORMER MODULE
STV – STATIC TRIP VOLTAGE PORT
STP – STATIC TRIP PORT
CD – COMMUNICATIONS DISCONNECT
LS – LIMIT SWITCH
YC – REMOTE CLOSE RELAY
PWR – POWER SUPPLY INPUT
DATA– COMMUNICATIONS DATA TERMINALS

STANDARD DRAWING
DO NOT DESTROY, CHANGE OR ADD MARK WITH W/O APPROVAL OF DESIGN ENGINEERING.

USED ON 2R

* CAD GENERATED, DO NOT CHANGE MANUALLY.

SEE SHEET #1.

01 07-26-93

Confidential–Property of
Siemens Energy & Automation, Inc.
Electrical Apparatus Division

1–PLACE DECIMAL ± .06
2–PLACE DECIMAL ± .03
3–PLACE DECIMAL ± .01
ANGULAR
MACHINED SURFACE TEXTURE
SIMILAR TO
DR AHT
CH SEM
APP
BULLETIN 07/94
DATA BASE \R\BKR\8M280YW

MATERIAL FIG. [2B]

N-C	CURRENT DATE	PART NUMBER	ISS
C	07-30-94	18-748-279-400	03

TYPE	REP	PART NAME	N.M.		SCALE	CHARACTERISTICS	SHEET NO.
22	23	STANDARD CONNECTION DIAGRAMS FOR STATIC TRIP III DEVICE			NONE		5–24

O:\RLTEMP\2B

STATIC TRIP III – CP
COMMUNICATION AND POWER METERING
WIRE HARNESS
3 PH. 4 WIRE

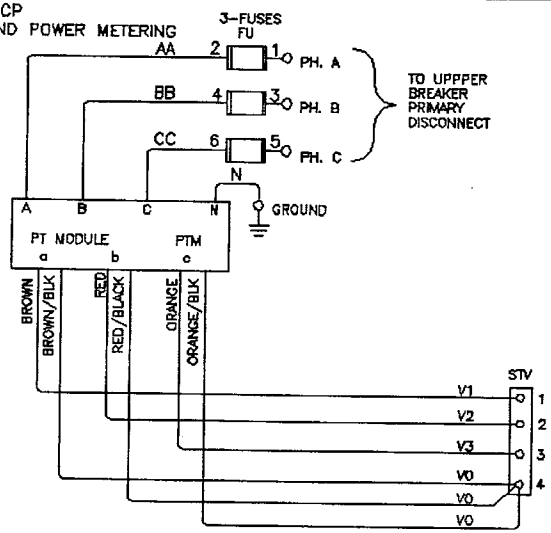

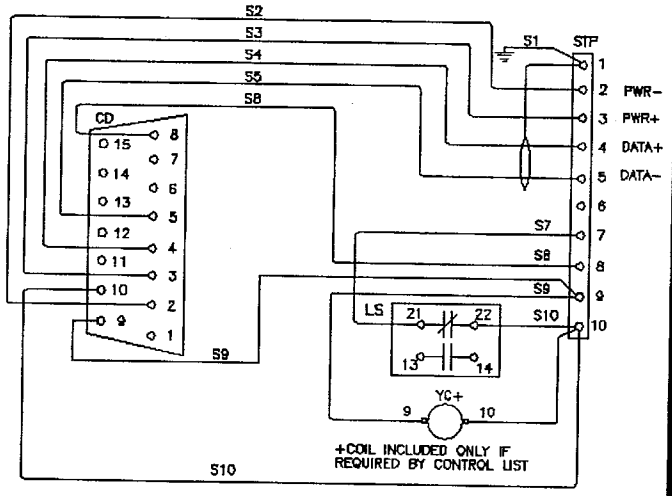

WIRE NO.	FROM	TO	SIZE
A	PH–A	FU–1	14
B	PH–B	FU–3	14
C	PH–C	FU–5	14
AA	FU–2	PTM–A	+
BB	FU–4	PTM–B	+
CC	FU–6	PTM–C	+

+DEVICE LEADS

WIRE NO.	FROM	TO	COLOR
N	NEUT	PTM–N	
N	NEUT	GRD	
V1	PTM–a	STV–1	BROWN
V2	PTM–b	STV–2	BRN/BLK
V3	PTM–c	STV–3	RED
V0	PTM–a	STV–4	RED/BLK
V0	PTM–b	STV–4	ORANGE
V0	PTM–c	STV–4	OR/BLK

SHLD 2/C B W

WIRE NO.	FROM	TO	SIZE
S1	STP–1	FRAME	18
S2	STP–2	CD–2	22
S3	STP–3	CD–3	22
S4	STP–4	CD–4	
S5	STP–5	CD–5	
SHLD	TERM	SHIELD @ STP–1	

WIRE NO.	FROM	TO	SIZE
S7	STP–7	LS–21	22
S8	STP–8	CD–8	22
S9	STP–9	CD–9	22
S9	STP–9	YC–9	22
S10	STP–10	LS–22	22
S10	STP–10	CD–10	22
S10	STP–10	YC–10	22

2C

DEVICE LIST
FU – POWER FUSE
GRD – GROUND CONNECTION
PH – PHASE VOLTAGE
PTM – POTENTIAL TRANSFORMER MODULE
STV – STATIC TRIP VOLTAGE PORT
STP – STATIC TRIP PORT
CD – COMMUNICATIONS DISCONNECT
LS – LIMIT SWITCH
YC – REMOTE CLOSE RELAY
PWR – POWER SUPPLY INPUT
DATA– COMMUNICATIONS DATA TERMINALS

STANDARD DRAWING
DO NOT DESTROY, CHANGE OR ADD MARK NO'S W/O APPROVAL OF DESIGN ENGINEERING.
* CAD GENERATED, DO NOT CHANGE MANUALLY.

USED ON 2R

SEE SHEET #1. 01 07-06-93

Confidential–Property of
Siemens Energy & Automation, Inc.
Electrical Apparatus Division

1–PLACE DECIMAL ± .06
2–PLACE DECIMAL ± .03
3–PLACE DECIMAL ± .01
ANGULAR
MACHINED SURFACE TEXTURE
SIMILAR TO
DR AHT
CH SEM
APP
BULLETIN 07/94
DATA BASE R\BKR\8M280YW

MATERIAL FIG. [2C]

N–C 2	CURRENT DATE 3–8	PART NUMBER 9–19	ISS 20–21
C	07-30-94	18-748-279-400	03

TYPE 22	REP 23	PART NAME 24–42	N.M. 44–48	49–53	SCALE	CHARACTERISTICS	SHEET NO.
		STANDARD CONNECTION DIAGRAMS FOR STATIC TRIP III DEVICE			NONE		6–24

G:\RLTEMP\2C

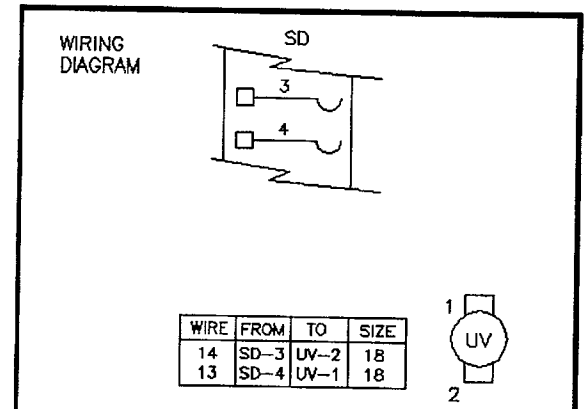

WIRE	FROM	TO	SIZE
14	SD-3	UV-2	18
13	SD-4	UV-1	18

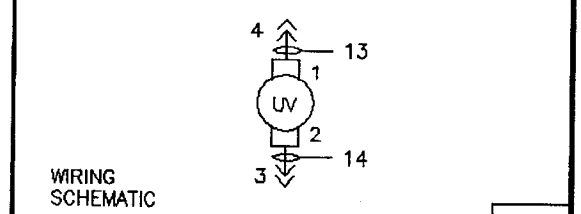

UNDERVOLTAGE TRIP

3A

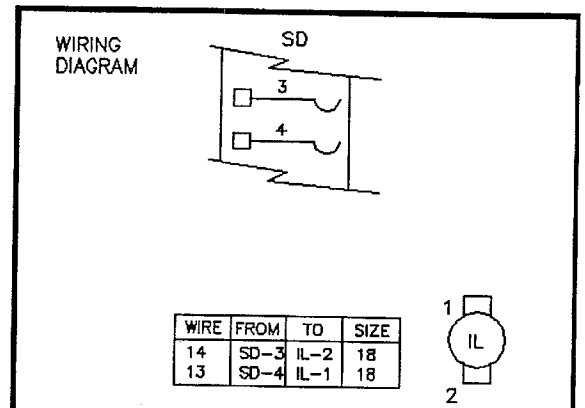

WIRE	FROM	TO	SIZE
14	SD-3	IL-2	18
13	SD-4	IL-1	18

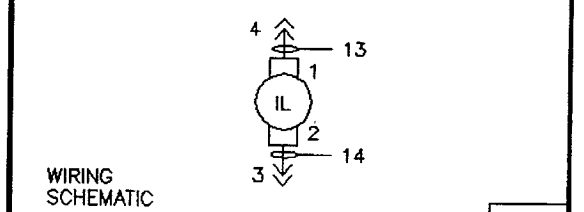

ELECTRO-MECHANICAL INTERLOCK

3B

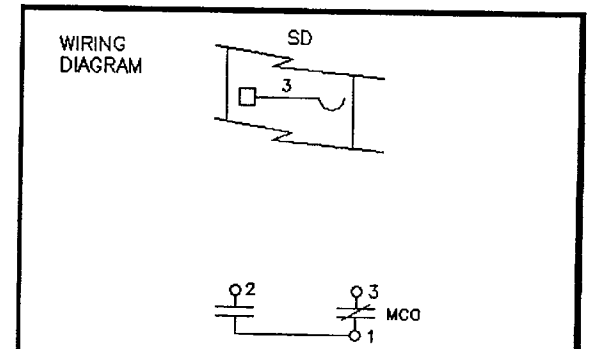

WIRE	FROM	TO	SIZE
27	SD-3	MCO-2	18

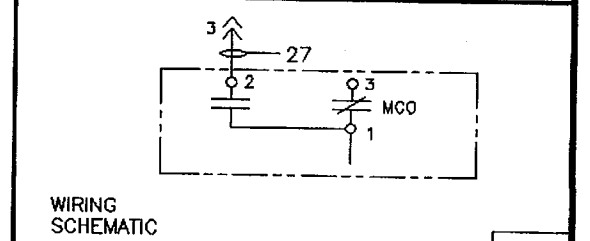

SPRING CHARGE LIGHT (EO ONLY)

3C

DEVICE LIST
UV – UNDERVOLTAGE DEVICE
IL – MECHANICAL INTERLOCK
SD – SECONDARY DISCONNECT
MCO – MOTOR CUTOFF

STANDARD DRAWING
DO NOT DESTROY, CHANGE OR ADD MARK NO'S W/O APPROVAL OF DESIGN ENGINEERING.
* CAD GENERATED, DO NOT CHANGE MANUALLY.

USED ON 2R

SEE SHEET #1. 01 07-06-93

Confidential–Property of
Siemens Energy & Automation, Inc.
Electrical Apparatus Division

1–PLACE DECIMAL ± .06
2–PLACE DECIMAL ± .03
3–PLACE DECIMAL ± .01
ANGULAR
MACHINED SURFACE TEXTURE
SIMILAR TO
DR AHT
CH SEM
APP
BULLETIN 07/94
DATA BASE \R\BKR\8M280YW

MATERIAL FIG. [3A], [3B], [3C]
N-C 2 C
CURRENT DATE 3-8 07-30-94
PART NUMBER 9-19 18-748-279-400
ISS 20-21 03
TYPE 22
REP 23
PART NAME 24-43 RL BREAKER WIRING
N.M. 44-48
49-53
SCALE NONE
CHARACTERISTICS
SHEET NO. 7-24

O:\RLTEMP\3RLBRKR

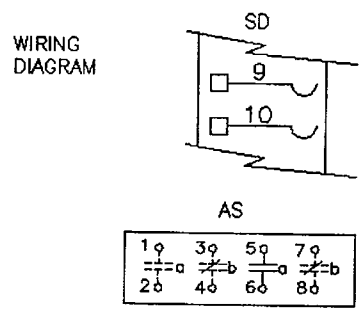

WIRE	FROM	TO	SIZE
8	SD-9	AS-6	14
7	SD-10	AS-5	14

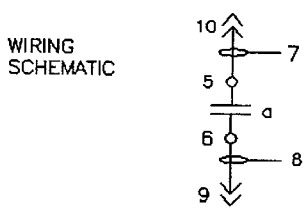

AUXILIARY CONTACT 1a

4A

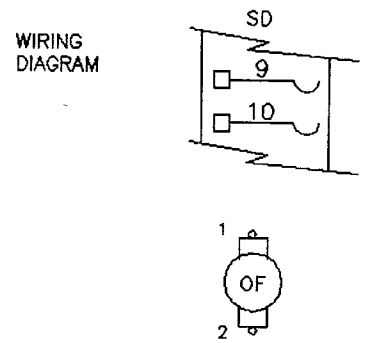

WIRE	FROM	TO	SIZE
8	SD-9	OF-2	18
7	SD-10	OF-1	18

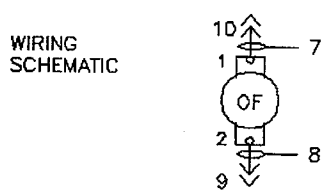

BLOW FUSE TRIP*

(FOR 3200 & 4000A BREAKERS)

4B

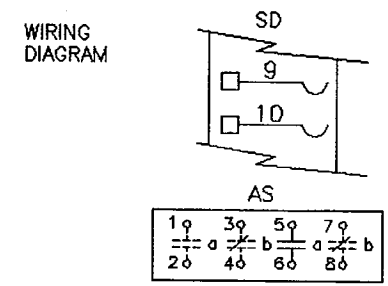

WIRE	FROM	TO	SIZE
8	SD-9	AS-6	18
7	SD-10	TC-1	18
7A	AS-5	TC-2	18

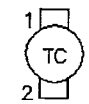

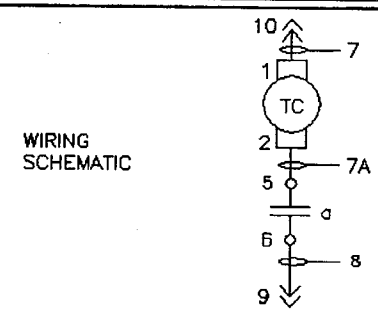

DUAL SHUNT TRIP

4C

*THIS FIGURE IS REQUIRED FOR 3200 AND 4000A FUSED BREAKERS

DEVICE LIST

OFLO – OVERLOAD FUSE COIL
TC – SHUNT TRIP COIL
AS – AUXILIARY SWITCH ASSEMBLY
SD – SECONDARY DISCONNECT
a – AUXILIARY SWITCH CONTRACT OPEN WHEN BREAKER IS OPEN
b – AUXILIARY SWITCH CONTACT CLOSED WHEN BREAKER IS OPEN

STANDARD DRAWING

DO NOT DESTROY, CHANGE OR ADD MARK NO'S W/O APPROVAL OF DESIGN ENGINEERING.

* CAD GENERATED, DO NOT CHANGE MANUALLY.

USED ON: 2R:

SEE SHEET #1.

01 07-06-93

Confidential–Property of
Siemens Energy & Automation, Inc.
Electrical Apparatus Division

1-PLACE DECIMAL ± .06
2-PLACE DECIMAL ± .03
3-PLACE DECIMAL ± .01

ANGULAR

MACHINED SURFACE TEXTURE

SIMILAR TO

DR AHT
CH SEM
APP

BULLETIN 07/94

DATA BASE \R\BKR\BM280YW

MATERIAL FIG. [4A], [4B], [4C]

N-C 2	CURRENT DATE 3-8	PART NUMBER 9-19	ISS 20-21
C	07-30-94	18-748-279-400	03

TYPE 22	REP 23	PART NAME 24-43	N.M. 44-48	49-53	SCALE	CHARACTERISTICS	SHEET NO.
		RL BREAKER WIRING			NONE		8-24

O:\RLTEMP\4RLBRKR

WIRING DIAGRAM

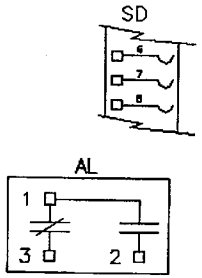

WIRE	FROM	TO	SIZE
11	SD-6	AL-2	18
10	SD-7	AL-1	18
9	SD-8	AL-3	18

WIRING SCHEMATIC

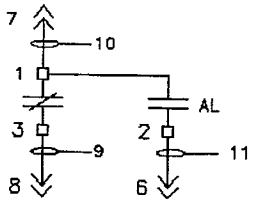

BELL ALARM – 1 FORM C CONTACT

5A

WIRING DIAGRAM

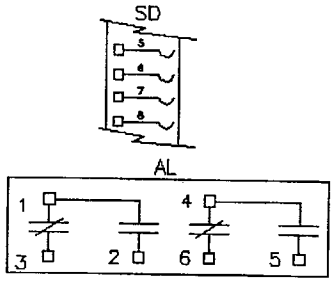

WIRE	FROM	TO	SIZE
12	SD-5	AL-5	18
11	SD-6	AL-4	18
10	SD-7	AL-3	18
9	SD-8	AL-1	18

WIRING SCHEMATIC

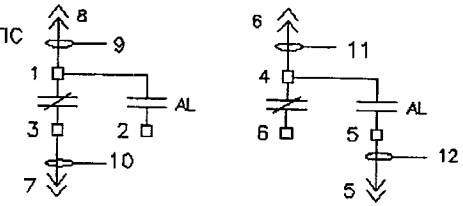

BELL ALARM 1a & 1b CONTACTS

5B

WIRING DIAGRAM

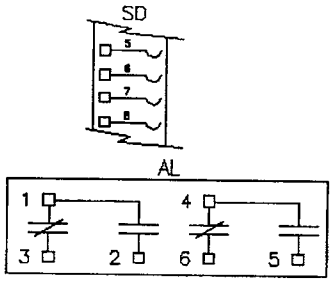

WIRE	FROM	TO	SIZE
12	SD-5	AL-6	18
11	SD-6	AL-4	18
10	SD-7	AL-3	18
9	SD-8	AL-1	18

WIRING SCHEMATIC

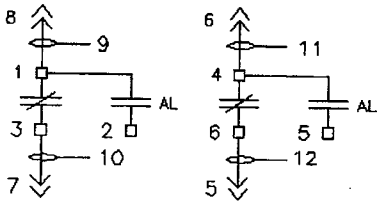

BELL ALARM 2b CONTACTS

5C

DEVICE LIST

SD – SECONDARY DISCONNECT
AL – ALARM CONTACTS

STANDARD DRAWING

DO NOT DESTROY, CHANGE OR ADD MARK NO'S W/O APPROVAL OF DESIGN ENGINEERING.

USED ON 2R

* CAD GENERATED, DO NOT CHANGE MANUALLY.

SEE SHEET #1. 01 07-06-93

Confidential–Property of
Siemens Energy & Automation, Inc.
Electrical Apparatus Division

1-PLACE DECIMAL ± .06
2-PLACE DECIMAL ± .03
3-PLACE DECIMAL ± .01
ANGULAR
MACHINED SURFACE TEXTURE
SIMILAR TO
DR AHT
CH SEM
APP
BULLETIN 07/94
DATA BASE \R\BKR\8M280YW

MATERIAL FIG. [5A], [5B], [5C]

N-C 2 C | CURRENT DATE 5-8 07-30-94 | PART NUMBER 9-19 18-748-279-400 | ISS 20-21 03

TYPE 22 | REP 23 | PART NAME 24-43 RL BREAKER WIRING | N.M. 44-48 | 49-53 | SCALE NONE | CHARACTERISTICS | SHEET NO. 9-24

O:\RLTEMP\5ARLBRKR

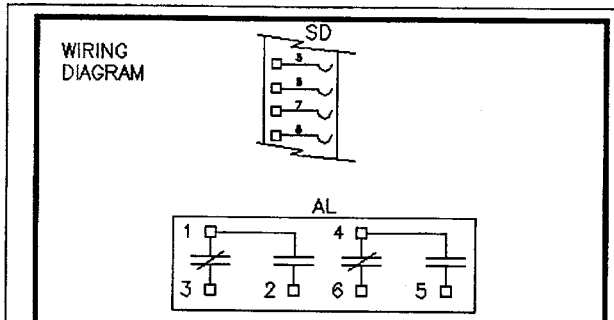

WIRE	FROM	TO	SIZE
12	SD-5	AL-5	18
11	SD-6	AL-4	18
10	SD-7	AL-2	18
9	SD-8	AL-1	18

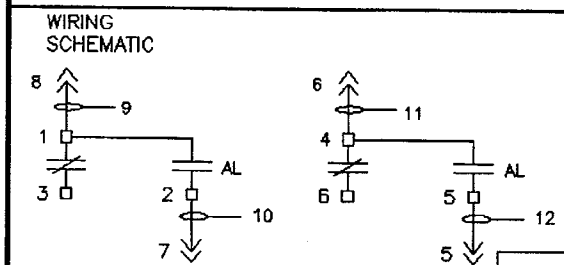

BELL ALARM 2A CONTACT

5D

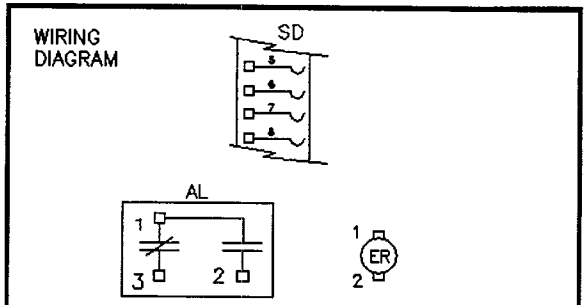

WIRE	FROM	TO	SIZE
12	SD-5	ER-2	18
11	SD-6	ER-1	18
10	SD-7	AL-3	18
9	SD-8	AL-1	18

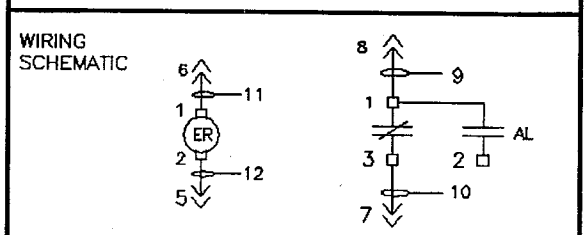

BELL ALARM 1b CONTACT
WITH ELECTRIC RESET

5E

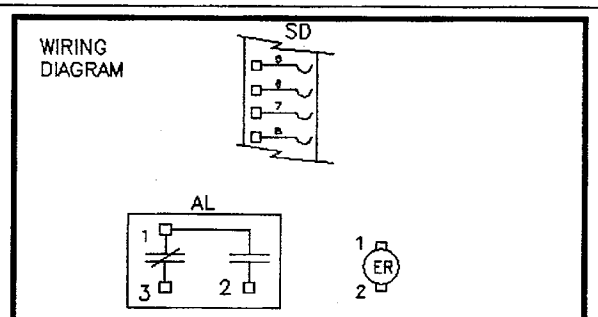

WIRE	FROM	TO	SIZE
12	SD-5	ER-2	18
11	SD-6	ER-1	18
10	SD-7	AL-2	18
9	SD-8	AL-1	18

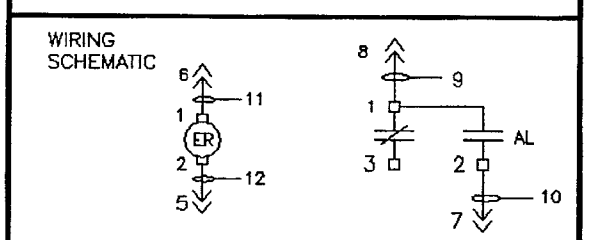

BELL ALARM 1a CONTACT
WITH ELECTRIC RESET

5F

DEVICE LIST
ER – ELECTRIC RESET COIL
SD – SECONDARY DISCONNECT
AL – ALARM CONTACTS

STANDARD DRAWING
DO NOT DESTROY, CHANGE OR ADD MARK NO'S W/O APPROVAL OF DESIGN ENGINEERING.

USED ON: 2R:

* CAD GENERATED, DO NOT CHANGE MANUALLY.

SEE SHEET #1.

01 07-06-93

Confidential–Property of
Siemens Energy & Automation, Inc.
Electrical Apparatus Division

1–PLACE DECIMAL ± .06
2–PLACE DECIMAL ± .03
3–PLACE DECIMAL ± .01

ANGULAR

MACHINED SURFACE TEXTURE

SIMILAR TO

DR AHT
CH SEM
APP

BULLETIN 07/94

DATA BASE \R\BKR\BM280YW

MATERIAL FIG. [5D], [5E], [5F]

N-C 2: C
CURRENT DATE 3-8: 07-30-94
PART NUMBER 9-19: 18-748-279-400
ISS 20-21: 03

TYPE 22
REP 23
PART NAME 24-43: RL BREAKER WIRING
N.M. 44-48
49-53
SCALE: NONE
CHARACTERISTICS
SHEET NO. 10-24

WIRING DIAGRAM

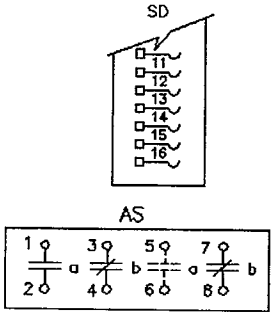

WIRE	FROM	TO	SIZE
1	SD-12	AS-3	14
2	SD-11	AS-4	14
3	SD-14	AS-7	14
4	SD-13	AS-8	14
5	SD-16	AS-1	14
6	SD-15	AS-2	14

WIRING SCHEMATIC

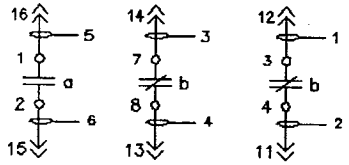

AUXILIARY CONTACTS FOR MO BREAKER

6A

WIRING DIAGRAM

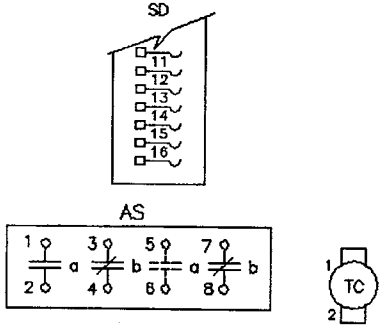

WIRE	FROM	TO	SIZE
1	SD-16	AS-4	14
2	SD-15	AS-2	18
2A	AS-1	TC-2	18
3	SD-14	AS-7	14
4	SD-13	AS-8	14
5	SD-12	AS-3	14
6	SD-11	TC-1	18

WIRING SCHEMATIC

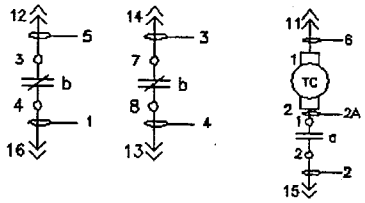

STANDARD SHUNT TRIP FOR MO BREAKER

6B

WIRING DIAGRAM

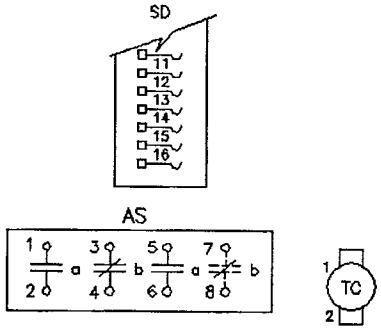

WIRE	FROM	TO	SIZE
1	SD-16	AS-6	14
2	SD-15	AS-2	18
2A	AS-1	TC-2	18
3	SD-14	AS-3	14
4	SD-13	AS-4	14
5	SD-12	AS-5	14
6	SD-11	TC-1	18

WIRING SCHEMATIC

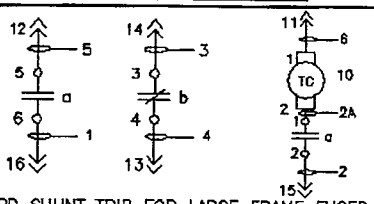

STANDARD SHUNT TRIP FOR LARGE FRAME FUSED MO BREAKERS ONLY – FIG. 5A NOT AVAILABLE

6C

DEVICE LIST

AS – AUXILIARY SWITCH
SD – SECONDARY DISCONNECT
TC – SHUNT TRIP COIL
a – AUXILIARY SWITCH CONTACT OPEN WHEN BREAKER IS OPEN
b – AUXILIARY SWITCH CONTACT CLOSED WHEN BREAKER IS OPEN

STANDARD DRAWING
DO NOT DESTROY, CHANGE OR ADD MARK NO'S W/O APPROVAL OF DESIGN ENGINEERING.

USED ON: 2R

* CAD GENERATED, DO NOT CHANGE MANUALLY.

SEE SHEET #1.

01 07-06-83

Confidential-Property of
Siemens Energy & Automation, Inc.
Electrical Apparatus Division

1-PLACE DECIMAL ± .06
2-PLACE DECIMAL ± .03
3-PLACE DECIMAL ± .01
ANGULAR
MACHINED SURFACE TEXTURE

SIMILAR TO

DR AHT
CH SEM
APP

BULLETIN 07/94

DATA BASE \R\BKR\8M280YW

MATERIAL FIG. [6A], [6B], [6C]

N-C 2: C
CURRENT DATE 3-8: 07-30-94
PART NUMBER 9-19: 18-748-279-400
ISS 20-21: 03

TYPE 22
REP. 23
PART NAME 24-42: RL BREAKER WIRING
N.M. 44-48
49-53
SCALE: NONE
CHARACTERISTICS
SHEET NO.: 11-24

0:\RLTEMP\6RLBRKR

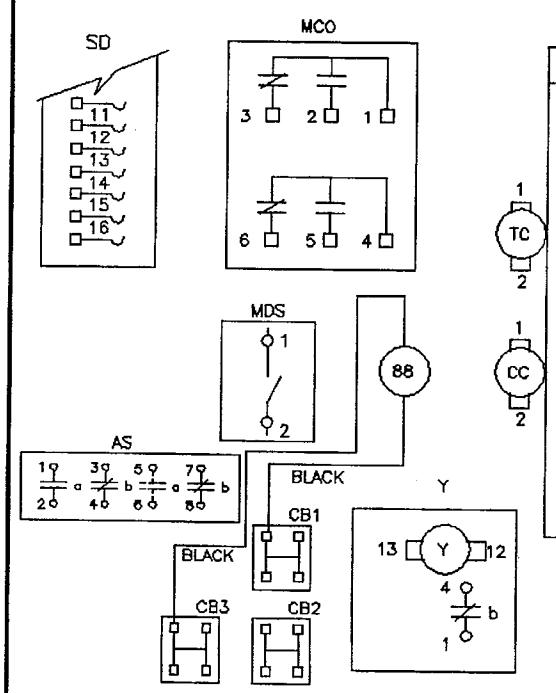

WIRE	TERMINALS		SIZE
1	SD-16	MDS-2	18
1A	MDS-1	CB1	18
1B	CC-2	CB1	18
1D	MDS-2	AS-8	18
2	SD-15	AS-2	18
2A	TC-2	AS-1	18
3	SD-14	AS-7	18
4	SD-13	AS-3	18
4A	Y-12	AS-3	18
4B	Y-1	AS-4	18
4C	Y-4	MCO-5	18
4D	MCO-4	CB2	18
4E	Y-13	CB2	18
4F	CC-1	CB2	18
5	SD-12	MCO-3	18
5A	CB3	MCO-1	18
6	SD-11	TC-1	18

HARNESS: 18-398-289-505

STANDARD EO BREAKER WIRING DIAGRAM

6D

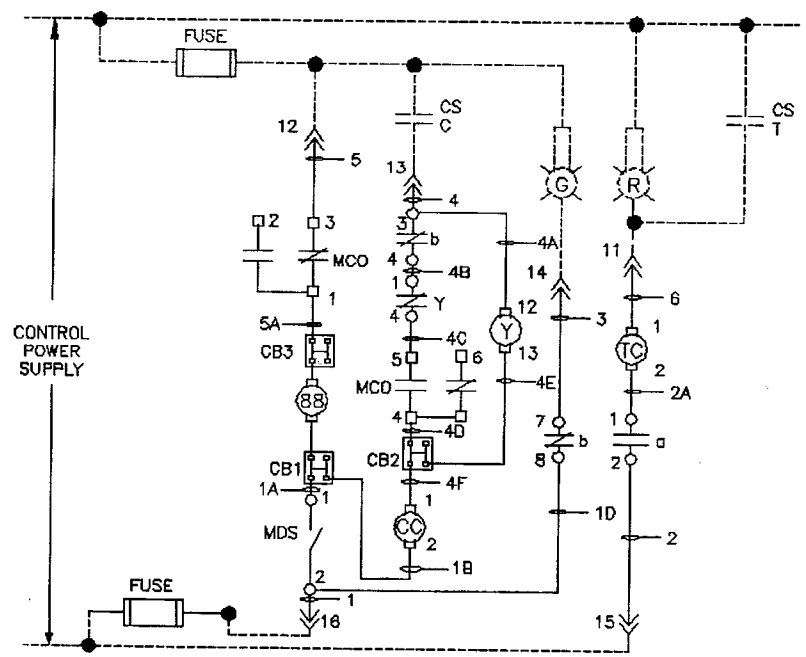

STANDARD EO BREAKER SCHEMATIC

6D

DEVICE LIST

CC – CLOSING COIL (SPRING RELEASE)
TC – SHUNT TRIP COIL
88 – SPRING CHARGING MOTOR
MCO – MOTOR CUTOFF SWITCH
MDS – MOTOR ON-OFF SWITCH
Y – CLOSING RELAY, ANTI-PUMP
a – AUXILIARY SWITCH CONTACT OPEN WHEN BREAKER IS OPEN
b – AUXILIARY SWITCH CONTACT CLOSED WHEN BREAKER IS OPEN
R – RED INDICATION LAMP, BKR. CLOSED
G – GREEN INDICATION LAMP, BKR. OPEN
CS/C – CONTROL SWITCH, CLOSE CONTACT
CS/T – CONTROL SWITCH, TRIP CONTACT
AS – AUXILIARY SWITCH
SD – SECONDARY DISCONNECT

CLASS "C" WIRING
#14 WIRE SIS. 00-557-286-341
#18 WIRE SIS. 00-557-286-003

□ – SINGLE FASTON TAB, ONE CONNECTION ONLY
○ – MULTIPLE CONNECTIONS POSSIBLE

STANDARD DRAWING
DO NOT DESTROY, CHANGE OR ADD MARK NO'S W/O APPROVAL OF DESIGN ENGINEERING.

USED ON: 2R:

* CAD GENERATED, DO NOT CHANGE MANUALLY.

01 07-06-93 UPDATED WIRING AND SCHEMATIC DIAGRAMS
02 08-23-93 AHT
SEE SHEET #1.

Confidential-Property of
Siemens Energy & Automation, Inc.
Electrical Apparatus Division

1-PLACE DECIMAL ± .06
2-PLACE DECIMAL ± .03
3-PLACE DECIMAL ± .01
ANGULAR
MACHINED SURFACE TEXTURE
SIMILAR TO
DR AHT
CH SEM
APP
BULLETIN 07/94
DATA BASE \R\BKR\8M280YW

MATERIAL FIG. [6D]

N-C 2	CURRENT DATE 3-8	PART NUMBER 9-19	ISS 20-21
C	07-30-94	18-748-279-400	03

TYPE 22	REP 23	PART NAME 24-43	N.M. 44-48	49-53	SCALE	CHARACTERISTICS	SHEET NO.
		RL WIRING DIAGRAM			NTS		13-24

O:\RLTEMP\6DRLBRKR

WIRING DIAGRAM

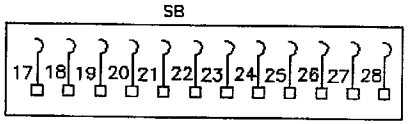

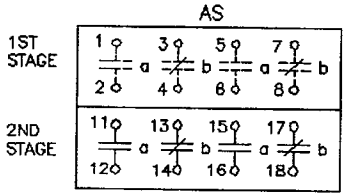

WIRE	FROM	TO	SIZE
24	SB-24	AS-18	14
23	SB-23	AS-17	14
22	SB-22	AS-16	14
21	SB-21	AS-15	14
20	SB-20	AS-14	14
19	SB-19	AS-13	14
18	SB-18	AS-12	14
17	SB-17	AS-11	14

WIRING SCHEMATIC

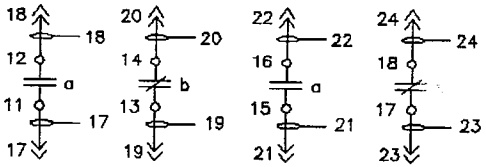

AUXILIARY CONTACTS 2A & 2B*

7A

*NOT AVAILABLE ON FUSED BREAKERS WITH COMPARTMENT SHUTTERS. THE MOC ACCESSORY MAY BE USED AS AN ALTERNATIVE.

WIRING DIAGRAM

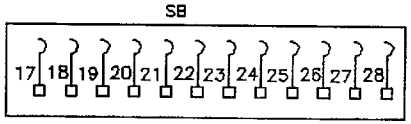

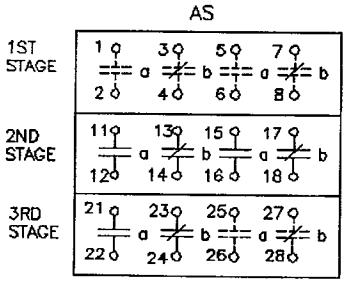

WIRE	FROM	TO	SIZE
28	SB-28	AS-24	14
27	SB-27	AS-23	14
26	SB-26	AS-22	14
25	SB-25	AS-21	14
24	SB-24	AS-18	14
23	SB-23	AS-17	14
22	SB-22	AS-16	14
21	SB-21	AS-15	14
20	SB-20	AS-14	14
19	SB-19	AS-13	14
18	SB-18	AS-12	14
17	SB-17	AS-11	14

WIRING SCHEMATIC

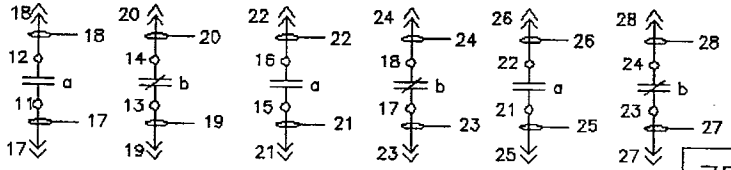

AUXILIARY CONTACTS 3a & 3b*

7B

NOTE: FIG. 7B NOT AVAILABLE WITH UNDERVOLTAGE OR ELECTRO-MECHANICAL INTERLOCK DEVICES.

DEVICE LIST

a – AUXILIARY SWITCH CONTACT OPEN WHEN BREAKER IS OPEN
b – AUXILIARY SWITCH CONTACT CLOSED WHEN BREAKER IS OPEN
AS – AUXILIARY SWITCH ASSEMBLY
SB – BOTTOM 12PT. SECONDARY DISCONNECT

STANDARD DRAWING
DO NOT DESTROY, CHANGE OR ADD MARK NO'S W/O APPROVAL OF DESIGN ENGINEERING.

USED ON: 2R

* CAD GENERATED. DO NOT CHANGE MANUALLY.

SEE SHEET #1. 01 07-30-93

Confidential-Property of
Siemens Energy & Automation, Inc.
Electrical Apparatus Division

1-PLACE DECIMAL ± .06
2-PLACE DECIMAL ± .03
3-PLACE DECIMAL ± .01
ANGULAR
MACHINED SURFACE TEXTURE
SIMILAR TO
DR AHT
CH SEM
APP
BULLETIN 07/94
DATA BASE \R\BKR\8M280YW

MATERIAL FIG. [7A],[7B]

N-C 2	CURRENT DATE 3-8	PART NUMBER 9-18	ISS 20-21
C	07-30-94	18-748-279-400	03

TYPE 22	REP. 23	PART NAME 24-43	N.M. 44-48	49-53	SCALE	CHARACTERISTICS	SHEET NO.
		RL BREAKER WIRING			NONE		12-24

O:\RLTEMP\7RLBRKR

STATIC TRIP III "4WRN-NEC"
WITH GROUND FAULT
WITH NEUTRAL METERING
*2 WINDING (DUAL)
SPECIAL

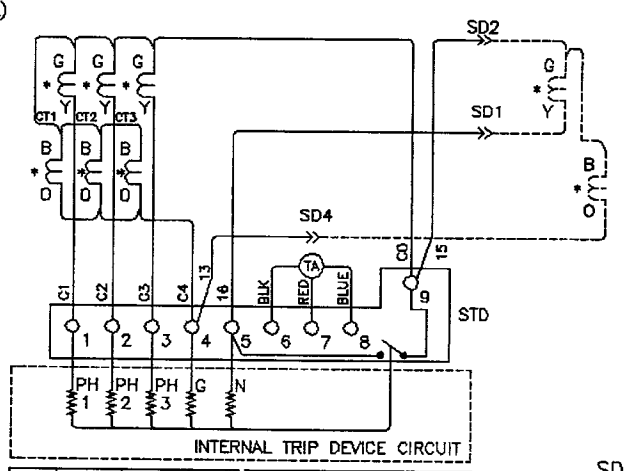

WIRE NO.	FROM	TO	WIRE
C1	CTI-Y	STD-1	18
C2	CT2-Y	STD-2	18
C3	CT3-Y	STD-3	18
CO	CT3-B	CT2-B	18
CO	CT2-B	CT1-B	18
CO	CT1-B	CT1-G	18
CO	CT1-G	CT2-G	18
CO	CT2-G	CT3-G	18
CO	CT3-G	STD-9	18

WIRE NO.	FROM	TO	WIRE
C4	CT1-O	CT2-O	18
C4	CT2-O	CT3-O	18
C4	CT3-O	STD-4	18
13	STD-4	SD-4	18
15	STD-9	SD-2	18
16	STD-5	SD-1	18
TA1	RED	STD-7	+
TA2	BLACK	STD-6	+
TA3	BLUE	STD-8	+

SD

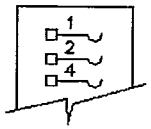

20A

STATIC TRIP III "4WDN"
WITH GROUND FAULT
WITH NEUTRAL METERING
1 WINDING
SPECIAL

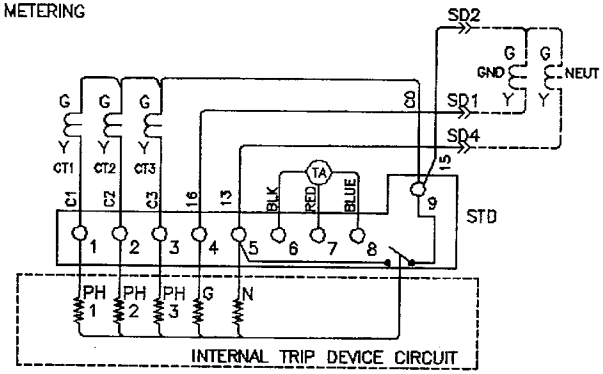

WIRE NO.	FROM	TO	WIRE
C1	CTI-Y	STD-1	18
C2	CT2-Y	STD-2	18
C3	CT3-Y	STD-3	18
CO	CT1-G	CT2-G	18
CO	CT2-G	CT3-G	18
CO	CT3-G	STD-9	18
13	STD-5	SD-4	18
15	STD-9	SD-2	18
16	STD-4	SD-1	18
TA1	RED	STD-7	+
TA2	BLACK	STD-6	+
TA3	BLUE	STD-8	+

SD

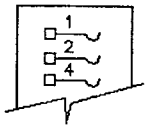

20B

+ DEVICE LEADS

DEVICE LIST

CT - CURRENT SENSOR
GND - GROUND CONNECTION
PH - PHASE VOLTAGE
SD - SECONDARY DISCONNECT
STD - STATIC TRIP DEVICE
TA - TRIP ACTUATOR

NOTES:
1. WITH FIG. 20A OR 20B, FIG. 3A AND 3B ARE NOT AVAILABLE.

STANDARD DRAWING
DO NOT DESTROY, CHANGE OR ADD MARK NO'S W/O APPROVAL OF DESIGN ENGINEERING.

USED ON 2R

* CAD GENERATED, DO NOT CHANGE MANUALLY.

SEE SHEET #1. 01 07-06-93

Confidential-Property of
Siemens Energy & Automation, Inc.
Electrical Apparatus Division

1-PLACE DECIMAL ± .06
2-PLACE DECIMAL ± .03
3-PLACE DECIMAL ± .01
ANGULAR
MACHINED SURFACE TEXTURE
SIMILAR TO
DR AHT
CH SEM
APP
BULLETIN 07/94
DATA BASE \R\BKR\8M280YW

MATERIAL FIG. [20A], [20B]
N-C 2: C
CURRENT DATE 3-6: 07-30-94
PART NUMBER 9-19: 18-748-279-400
ISS 20-21: 03

TYPE 22
REP 23
PART NAME 24-43: SPECIAL CONNECTION DIAGRAMS FOR STATIC TRIP III DEVICE
N.N. 44-48
49-53
SCALE: NONE
CHARACTERISTICS
SHEET NO. 14-24

O:\RLTEMP\20A20B

STATIC TRIP III "4WM"
WITH GROUND FAULT
NO NEUTRAL METERING
1 WINDING
SPECIAL

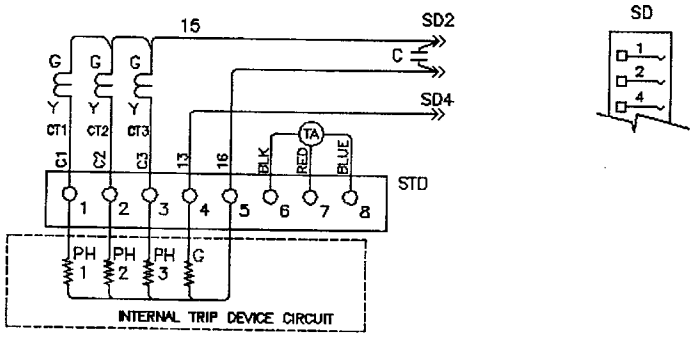

WIRE NO.	FROM	TO	WIRE
C1	CT1-Y	STD-1	18
C2	CT2-Y	STD-2	18
C3	CT3-Y	STD-3	18
CO	CT1-G	CT2-G	18
CO	CT2-G	CT3-G	18
13	STD-4	SD-4	18
15	CT3-C	SD-2	18
16	STD-5	SD-1	18
TA1	RED	STD-7	+
TA2	BLACK	STD-6	+
TA3	BLUE	STD-8	+

20C

STATIC TRIP III "4WM-NEC"
WITH GROUND FAULT
WITH NEUTRAL METERING
* 2 WINDING DUAL
SPECIAL

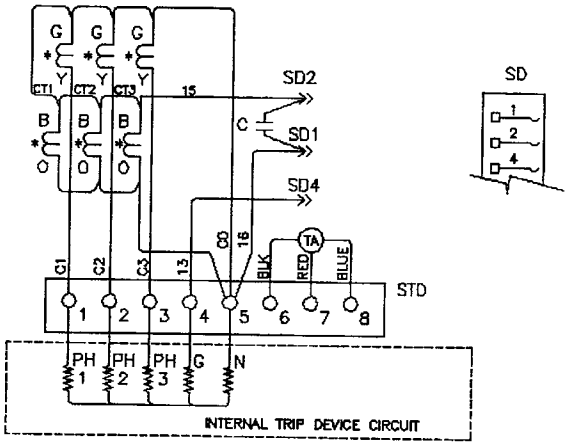

WIRE NO.	FROM	TO	WIRE
C1	CT1-Y	STD-1	18
C2	CT2-Y	STD-2	18
C3	CT3-Y	STD-3	18
CO	CT3-B	CT2-B	18
CO	CT2-B	CT1-B	18
CO	CT1-B	CT1-G	18
CO	CT1-G	CT2-G	18
CO	CT2-G	CT3-G	18
CO	CT3-G	STD-5	18
16	STD-5	SD-1	18

WIRE NO.	FROM	TO	WIRE
CO	CT1-O	CT2-O	18
CO	CT2-O	CT3-O	18
CO	CT3-O	STD-5	18
13	STD-4	SD-4	18
15	CT3-B	SD-2	18
TA1	RED	STD-7	+
TA2	BLACK	STD-6	+
TA3	BLUE	STD-8	+

20D

\+ DEVICE LEADS

DEVICE LIST
CT - CURRENT SENSOR
GND - GROUND CONNECTION
PH - PHASE VOLTAGE
SD - SECONDARY DISCONNECT
STD - STATIC TRIP DEVICE
TA - TRIP ACTUATOR

NOTES:
1. WITH FIG. 20C OR 20D, FIG. 3A AND 3B ARE NOT AVAILABLE.
2. CONTACT "C" IS CLOSED WHEN BREAKER IS OUT OF COMPARTMENT.

STANDARD DRAWING
DO NOT DESTROY, CHANGE OR ADD MARK NO'S W/O APPROVAL OF DESIGN ENGINEERING.

USED ON: 2R

* CAD GENERATED, DO NOT CHANGE MANUALLY.

SEE SHEET #1.

01 07-06-93

Confidential-Property of
Siemens Energy & Automation, Inc.
Electrical Apparatus Division

1-PLACE DECIMAL ± .06
2-PLACE DECIMAL ± .03
3-PLACE DECIMAL ± .01
ANGULAR
MACHINED SURFACE TEXTURE
SIMILAR TO
DR AHT
CH SEM
APP
BULLETIN 07/94
DATA BASE \R\BKR\8M280YW

MATERIAL FIG. [20C], [20D]

N-C 2 C | CURRENT DATE 3-8 07-30-94 | PART NUMBER 9-19 18-748-279-400 | ISS 20-21 03

TYPE 22 | REP 23 | PART NAME 24-43 SPECIAL CONNECTION DIAGRAMS FOR STATIC TRIP III DEVICE | N.M. 44-48 | 49-53 | SCALE NONE | CHARACTERISTICS | SHEET NO. 15-24

O:\RLTEMP\20C20D

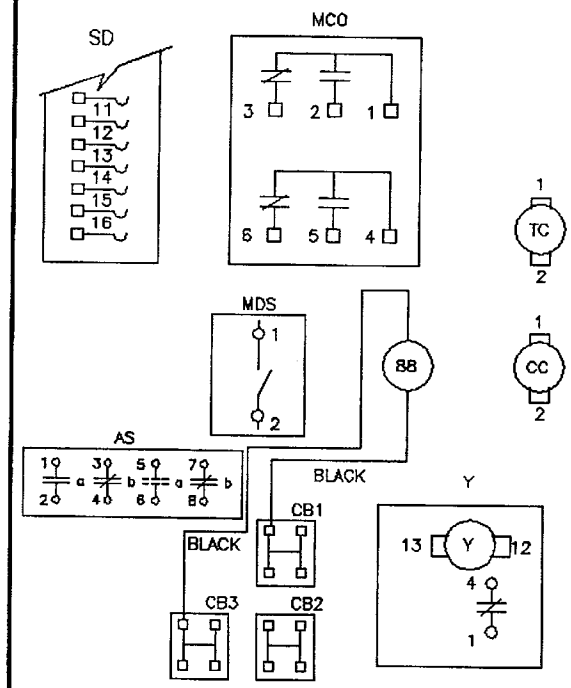

SEPARATE MOTOR CIRCUIT (SPECIAL)

WIRE	TERMINALS		SIZE	
1	SD-16	AS-8	18	HARNESS: 18-398-289-505
1A	MDS-1	CB1	18	
1B	CC-2	AS-8	18	
1D	SD-3	MDS-2	18	
2	SD-15	AS-2	18	
2A	TC-2	AS-1	18	
3	SD-14	AS-7	18	
4	SD-13	AS-3	18	
4A	Y-12	AS-3	18	
4B	Y-1	AS-4	18	
4C	Y-4	MCO-5	18	
4D	MCO-4	CB2	18	
4E	Y-13	CB2	18	
4F	CC-1	CB2	18	
5	SD-12	MCO-3	18	
5A	CB3	MCO-1	18	
6	SD-11	TC-1	18	

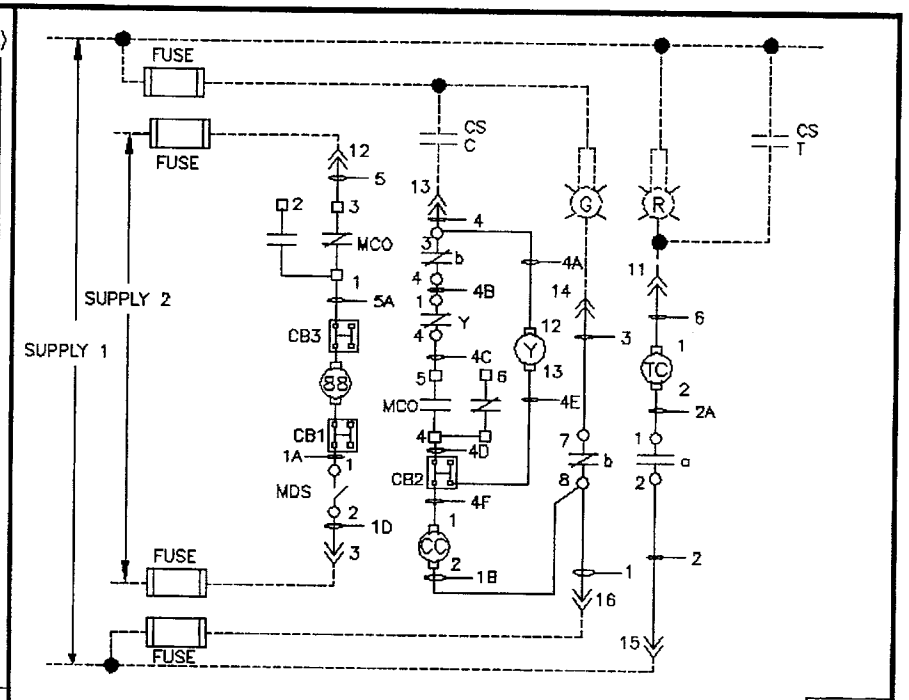

DEVICE LIST

CC - CLOSING COIL (SPRING RELEASE)
TC - SHUNT TRIP COIL
88 - SPRING CHARGING MOTOR
MCO - MOTOR CUTOFF SWITCH
MDS - MOTOR ON-OFF SWITCH
Y - CLOSING RELAY, ANTI-PUMP
a - AUXILIARY SWITCH CONTACT OPEN WHEN BREAKER IS OPEN
b - AUXILIARY SWITCH CONTACT CLOSED WHEN BREAKER IS OPEN
R - RED INDICATION LAMP, BKR. CLOSED
G - GREEN INDICATION LAMP, BKR. OPEN
CS/C- CONTROL SWITCH, CLOSE CONTACT
CS/T- CONTROL SWITCH, TRIP CONTACT
AS - AUXILIARY SWITCH
SD - SECONDARY DISCONNECT

NOTES:
1. FIGURES 3A, 3B, AND 6D NOT AVAILABLE WITH THIS FEATURE.

CLASS "C" WIRING
#14 WIRE SIS. 00-557-286-341
#18 WIRE SIS. 00-557-286-003

□ - SINGLE FASTON TAB, ONE CONNECTION ONLY
○ - MULTIPLE CONNECTIONS POSSIBLE

STANDARD DRAWING
DO NOT DESTROY, CHANGE OR ADD MARK NO'S W/O APPROVAL OF DESIGN ENGINEERING.

USED ON: 2R:

* CAD GENERATED, DO NOT CHANGE MANUALLY.

01	07-06-93	UPDATED WIRING DIAG.	
02	08-23-93	AHT	AND SCHEMATIC

SEE SHEET #1.

Confidential-Property of
Siemens Energy & Automation, Inc.
Electrical Apparatus Division

1-PLACE DECIMAL ± .06
2-PLACE DECIMAL ± .03
3-PLACE DECIMAL ± .01
ANGULAR
MACHINED SURFACE TEXTURE
SIMILAR TO
DR AHT
CH SEM
APP
BULLETIN 07/94
DATA BASE \R\BKR\BM2BOYW

MATERIAL	N-C 2	CURRENT DATE 3-8	PART NUMBER 9-19	ISS 20-21
FIG. [21A]	C	07-30-94	18-748-279-400	03

TYPE 22	REP 23	PART NAME 24-43	N.N. 44-48	49-53	SCALE	CHARACTERISTICS	SHEET NO.
		RL WIRING DIAGRAM (SPECIAL)			NTS		16-24

O:\RLTEMP\21ARLBKR

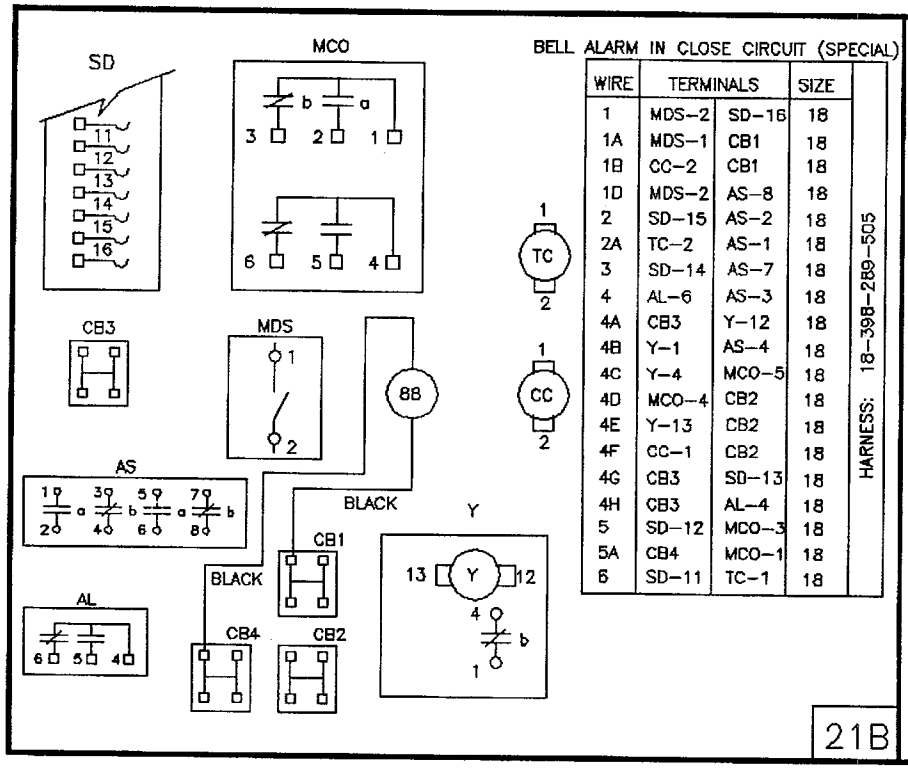

BELL ALARM IN CLOSE CIRCUIT (SPECIAL)

WIRE	TERMINALS		SIZE	
1	MDS-2	SD-16	18	HARNESS: 18-398-289-505
1A	MDS-1	CB1	18	
1B	CC-2	CB1	18	
1D	MDS-2	AS-8	18	
2	SD-15	AS-2	18	
2A	TC-2	AS-1	18	
3	SD-14	AS-7	18	
4	AL-6	AS-3	18	
4A	CB3	Y-12	18	
4B	Y-1	AS-4	18	
4C	Y-4	MCO-5	18	
4D	MCO-4	CB2	18	
4E	Y-13	CB2	18	
4F	CC-1	CB2	18	
4G	CB3	SD-13	18	
4H	CB3	AL-4	18	
5	SD-12	MCO-3	18	
5A	CB4	MCO-1	18	
6	SD-11	TC-1	18	

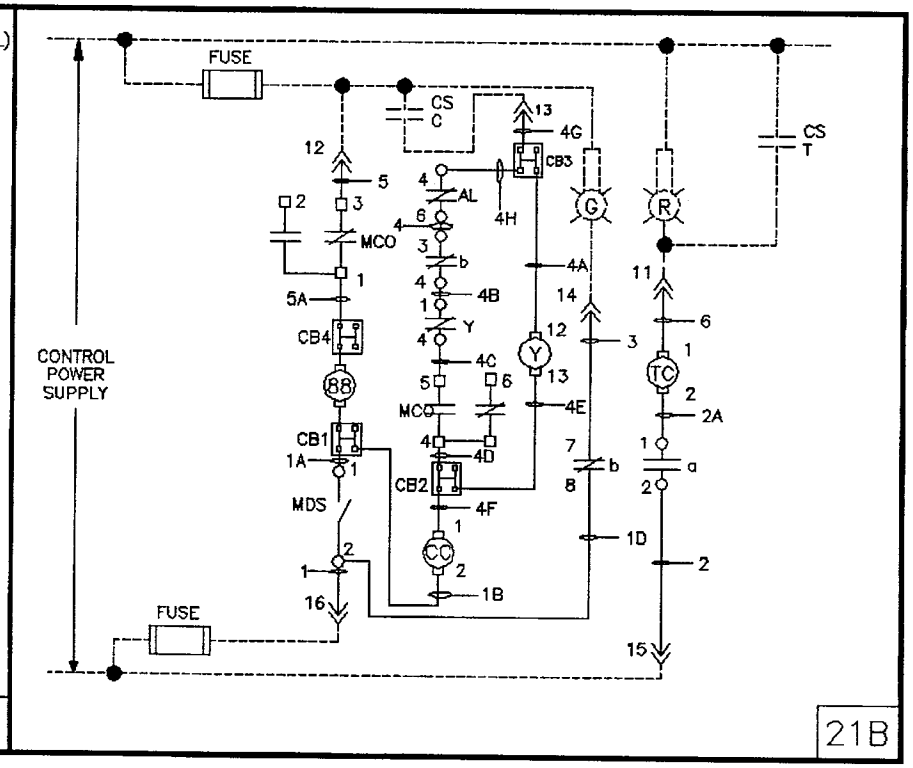

DEVICE LIST

- CC – CLOSING COIL (SPRING RELEASE)
- TC – SHUNT TRIP COIL
- 88 – SPRING CHARGING MOTOR
- MCO – MOTOR CUTOFF SWITCH
- MDS – MOTOR ON-OFF SWITCH
- Y – CLOSING RELAY, ANTI-PUMP
- a – AUXILIARY SWITCH CONTACT OPEN WHEN BREAKER IS OPEN
- b – AUXILIARY SWITCH CONTACT CLOSED WHEN BREAKER IS OPEN
- R – RED INDICATION LAMP, BKR. CLOSED
- G – GREEN INDICATION LAMP, BKR. OPEN
- CS/C – CONTROL SWITCH, CLOSE CONTACT
- CS/T – CONTROL SWITCH, TRIP CONTACT
- AS – AUXILIARY SWITCH
- SD – SECONDARY DISCONNECT

NOTES:
1. FIGURES 5B, 5C, 5D, AND 6D NOT AVAILABLE WITH THIS FEATURE.

CLASS "C" WIRING
#14 WIRE SIS. 00-557-286-341
#18 WIRE SIS. 00-557-286-003

□ – SINGLE FASTON TAB, ONE CONNECTION ONLY
○ – MULTIPLE CONNECTIONS POSSIBLE

STANDARD DRAWING
DO NOT DESTROY, CHANGE OR ADD MARK NO'S W/O APPROVAL OF DESIGN ENGINEERING.

USED ON 2R

* CAD GENERATED, DO NOT CHANGE MANUALLY.

01	07-06-93	UPDATED WIRING DIAG.
02	08-23-93	AHT AND SCHEMATIC

SEE SHEET #1.

Confidential–Property of
Siemens Energy & Automation, Inc.
Electrical Apparatus Division

1-PLACE DECIMAL ± .06
2-PLACE DECIMAL ± .03
3-PLACE DECIMAL ± .01
ANGULAR
MACHINED SURFACE TEXTURE

SIMILAR TO
DR AHT
CH SEM
APP
BULLETIN 07/94

DATA BASE \R\BKR\8M280YW

MATERIAL FIG. [21B]

N-C	CURRENT DATE	PART NUMBER	ISS
C	07-30-94	18-748-279-400	03

TYPE	REP	PART NAME	N.M.		SCALE	CHARACTERISTICS	SHEET NO.
22	23	RL WIRING DIAGRAM (SPECIAL)	44-48	49-53	NTS		17-24

D:\RLTEMP\21BRLBKR

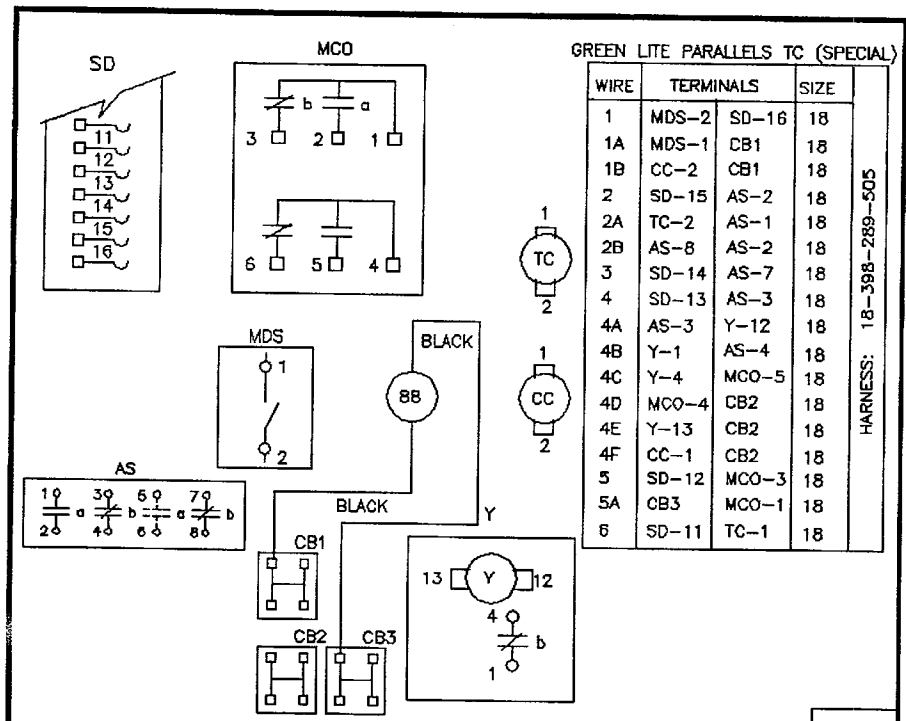

GREEN LITE PARALLELS TC (SPECIAL)

WIRE	TERMINALS		SIZE	HARNESS: 18-398-289-505
1	MDS-2	SD-16	18	
1A	MDS-1	CB1	18	
1B	CC-2	CB1	18	
2	SD-15	AS-2	18	
2A	TC-2	AS-1	18	
2B	AS-8	AS-2	18	
3	SD-14	AS-7	18	
4	SD-13	AS-3	18	
4A	AS-3	Y-12	18	
4B	Y-1	AS-4	18	
4C	Y-4	MCO-5	18	
4D	MCO-4	CB2	18	
4E	Y-13	CB2	18	
4F	CC-1	CB2	18	
5	SD-12	MCO-3	18	
5A	CB3	MCO-1	18	
6	SD-11	TC-1	18	

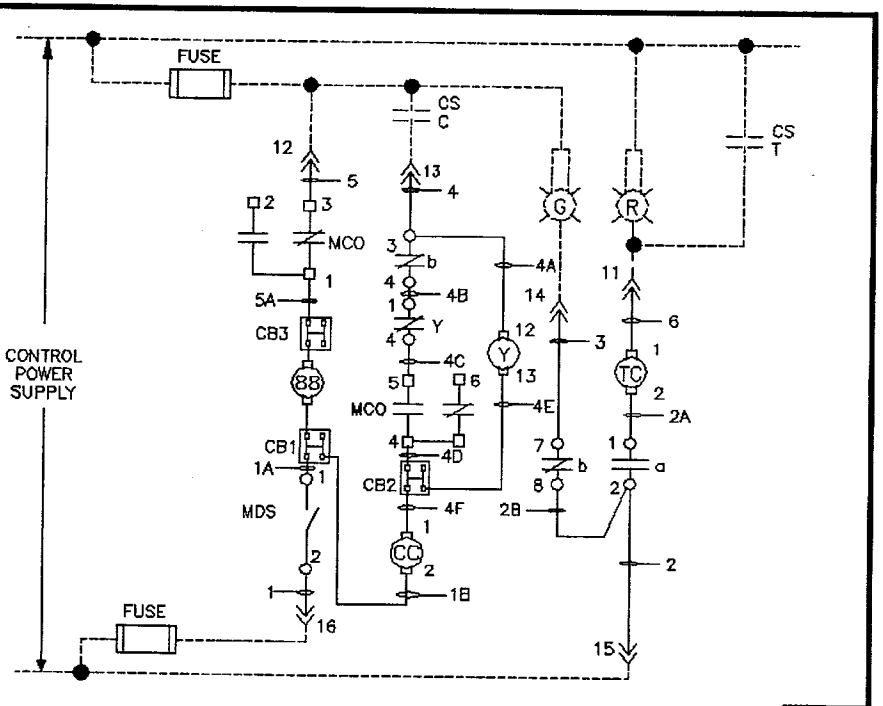

DEVICE LIST

CC – CLOSING COIL (SPRING RELEASE)
TC – SHUNT TRIP COIL
88 – SPRING CHARGING MOTOR
MCO – MOTOR CUTOFF SWITCH
MDS – MOTOR ON-OFF SWITCH
Y – CLOSING RELAY, ANTI-PUMP
a – AUXILIARY SWITCH CONTACT OPEN WHEN BREAKER IS OPEN
b – AUXILIARY SWITCH CONTACT CLOSED WHEN BREAKER IS OPEN
R – RED INDICATION LAMP, BKR. CLOSED
G – GREEN INDICATION LAMP, BKR. OPEN
CS/C – CONTROL SWITCH, CLOSE CONTACT
CS/T – CONTROL SWITCH, TRIP CONTACT
AS – AUXILIARY SWITCH
SD – SECONDARY DISCONNECT

NOTES:
1. FIG. 6D NOT AVAILABLE WITH THIS FEATURE.

CLASS "C" WIRING
#14 WIRE SIS. 00-557-286-341
#18 WIRE SIS. 00-557-286-003

□ – SINGLE FASTON TAB, ONE CONNECTION ONLY
○ – MULTIPLE CONNECTIONS POSSIBLE

STANDARD DRAWING
DO NOT DESTROY, CHANGE OR ADD MARK NO'S W/O APPROVAL OF DESIGN ENGINEERING.

USED ON: 2R

* CAD GENERATED, DO NOT CHANGE MANUALLY.

SEE SHEET #1.

01	07-06-93	UPDATED WIRING DIAG. AND SCHDMATIC
02	08-23-93	AHT

Confidential-Property of
Siemens Energy & Automation, Inc.
Electrical Apparatus Division

1-PLACE DECIMAL ± .06
2-PLACE DECIMAL ± .03
3-PLACE DECIMAL ± .01
ANGULAR
MACHINED SURFACE TEXTURE
SIMILAR TO
DR AHT
CH SEM
APP
BULLETIN 07/94
DATA BASE \R\BKR\8M280YW

MATERIAL FIG. [21C]
N-C 2: C
CURRENT DATE 3-8: 07-30-94
PART NUMBER 8-19: 18-748-279-400
ISS 20-21: 03
TYPE 22
REP 23
PART NAME 24-43: RL WIRING DIAGRAM (SPECIAL)
N.M. 44-48
49-53
SCALE: NTS
CHARACTERISTICS
SHEET NO.: 18-24

O:\RLTEMP\21CRLBKR

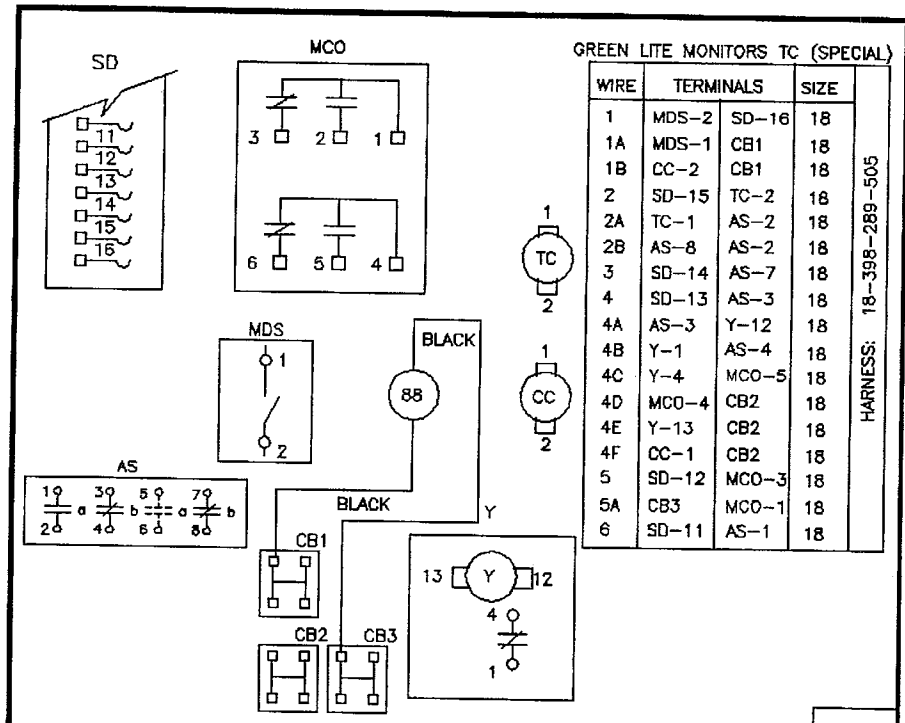

GREEN LITE MONITORS TC (SPECIAL)

WIRE	TERMINALS		SIZE	
1	MDS-2	SD-16	18	HARNESS: 18-398-289-505
1A	MDS-1	CB1	18	
1B	CC-2	CB1	18	
2	SD-15	TC-2	18	
2A	TC-1	AS-2	18	
2B	AS-8	AS-2	18	
3	SD-14	AS-7	18	
4	SD-13	AS-3	18	
4A	AS-3	Y-12	18	
4B	Y-1	AS-4	18	
4C	Y-4	MCO-5	18	
4D	MCO-4	CB2	18	
4E	Y-13	CB2	18	
4F	CC-1	CB2	18	
5	SD-12	MCO-3	18	
5A	CB3	MCO-1	18	
6	SD-11	AS-1	18	

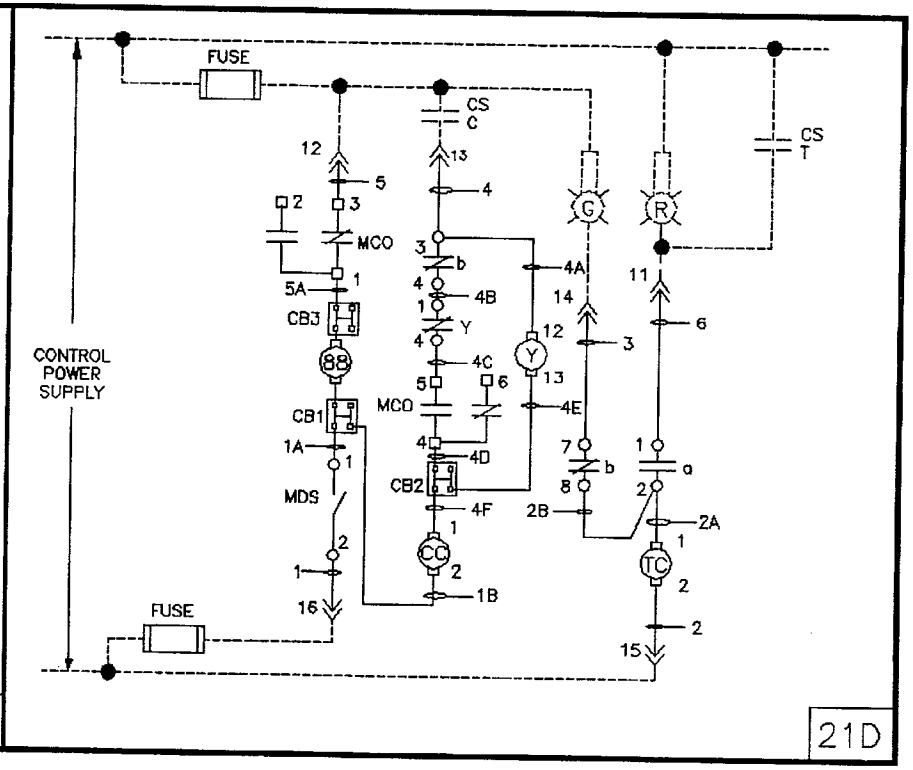

DEVICE LIST

- CC – CLOSING COIL (SPRING RELEASE)
- TC – SHUNT TRIP COIL
- 88 – SPRING CHARGING MOTOR
- MCO – MOTOR CUTOFF SWITCH
- MDS – MOTOR ON-OFF SWITCH
- Y – CLOSING RELAY, ANTI-PUMP
- a – AUXILIARY SWITCH CONTACT OPEN WHEN BREAKER IS OPEN
- b – AUXILIARY SWITCH CONTACT CLOSED WHEN BREAKER IS OPEN
- R – RED INDICATION LAMP, BKR. CLOSED
- G – GREEN INDICATION LAMP, BKR. OPEN
- CS/C – CONTROL SWITCH, CLOSE CONTACT
- CS/T – CONTROL SWITCH, TRIP CONTACT
- AS – AUXILIARY SWITCH
- SD – SECONDARY DISCONNECT

NOTES:
1. FIGURE 6D NOT AVAILABLE WITH THIS FEATURE.

CLASS "C" WIRING
#14 WIRE SIS. 00-557-286-341
#18 WIRE SIS. 00-557-286-003

□ – SINGLE FASTON TAB, ONE CONNECTION ONLY
○ – MULTIPLE CONNECTIONS POSSIBLE

STANDARD DRAWING
DO NOT DESTROY, CHANGE OR ADD MARK NO'S W/O APPROVAL OF DESIGN ENGINEERING.

USED ON: 2R

* CAD GENERATED, DO NOT CHANGE MANUALLY.

SEE SHEET #1.

02	08-23-93	AHT
01	07-06-93	UPDATED WIRING AND SCHEMATIC DIAG.

Confidential–Property of
Siemens Energy & Automation, Inc.
Electrical Apparatus Division

1-PLACE DECIMAL ± .06
2-PLACE DECIMAL ± .03
3-PLACE DECIMAL ± .01
ANGULAR
MACHINED SURFACE TEXTURE
SIMILAR TO
DR AHT
CH SEM
APP
BULLETIN 07/94
DATA BASE \R\BKR\BM280YW

MATERIAL FIG. [21D]

N-C 2	CURRENT DATE 3-8	PART NUMBER 6-19	ISS 20-21
C	07-30-94	18-748-279-400	03

TYPE 22	REP. 23	PART NAME 24-43	N.M. 44-48	49-53	SCALE	CHARACTERISTICS	SHEET NO.
		RL WIRING DIAGRAM (SPECIAL)			NTS		19-24

0:\RLTEMP\21DRLBKR

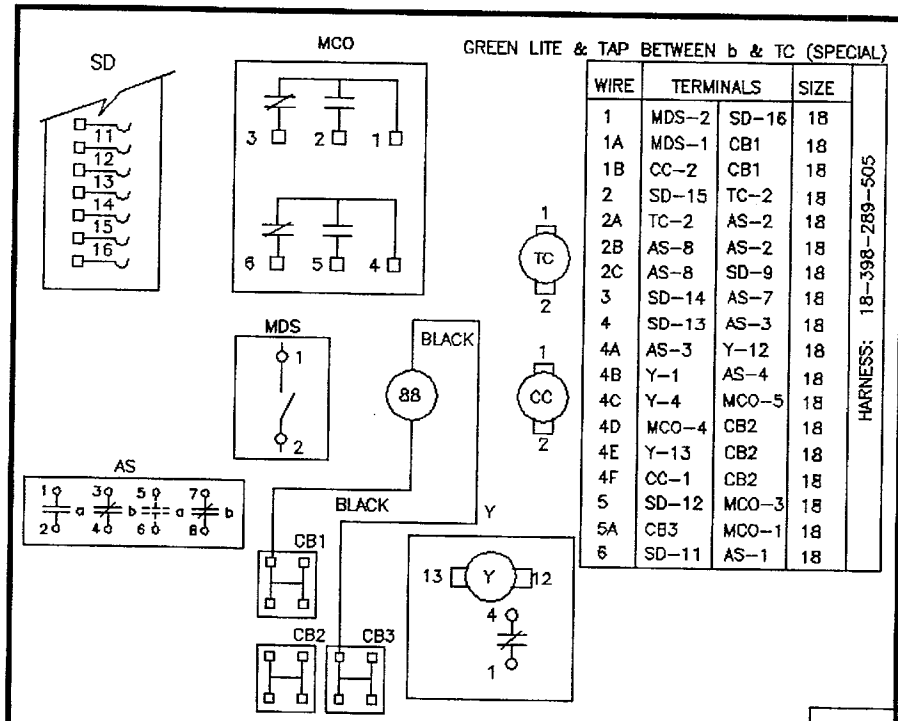

GREEN LITE & TAP BETWEEN b & TC (SPECIAL)

WIRE	TERMINALS		SIZE	
1	MDS-2	SD-16	18	HARNESS: 18-398-289-505
1A	MDS-1	CB1	18	
1B	CC-2	CB1	18	
2	SD-15	TC-2	18	
2A	TC-2	AS-2	18	
2B	AS-8	AS-2	18	
2C	AS-8	SD-9	18	
3	SD-14	AS-7	18	
4	SD-13	AS-3	18	
4A	AS-3	Y-12	18	
4B	Y-1	AS-4	18	
4C	Y-4	MCO-5	18	
4D	MCO-4	CB2	18	
4E	Y-13	CB2	18	
4F	CC-1	CB2	18	
5	SD-12	MCO-3	18	
5A	CB3	MCO-1	18	
6	SD-11	AS-1	18	

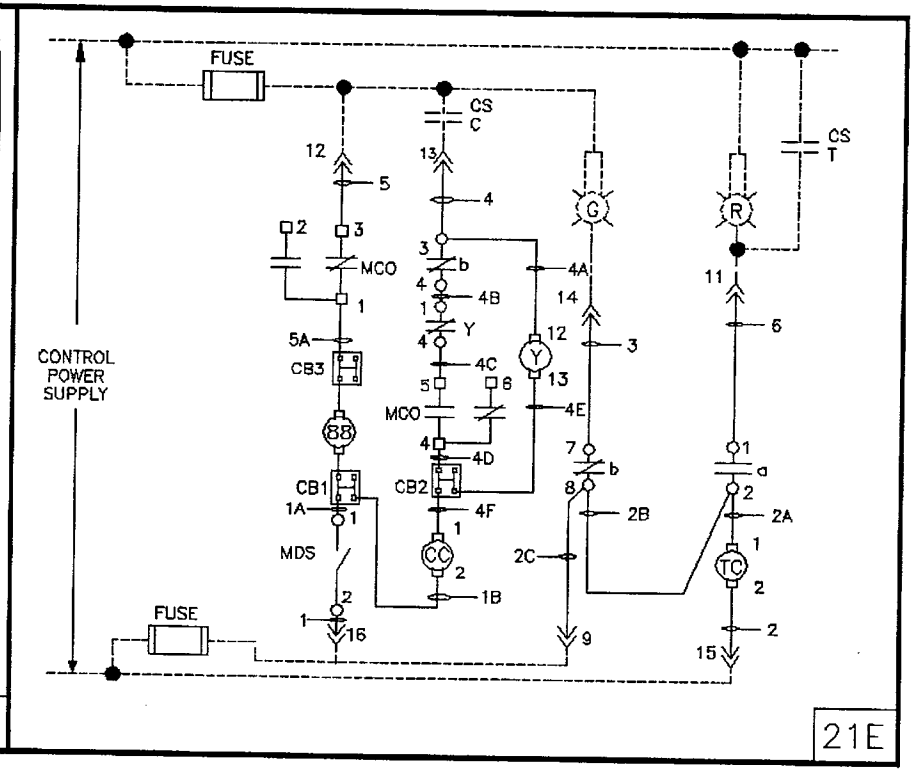

DEVICE LIST

- CC – CLOSING COIL (SPRING RELEASE)
- TC – SHUNT TRIP COIL
- 88 – SPRING CHARGING MOTOR
- MCO – MOTOR CUTOFF SWITCH
- MDS – MOTOR ON-OFF SWITCH
- Y – CLOSING RELAY, ANTI-PUMP
- a – AUXILIARY SWITCH CONTACT OPEN WHEN BREAKER IS OPEN
- b – AUXILIARY SWITCH CONTACT CLOSED WHEN BREAKER IS OPEN
- R – RED INDICATION LAMP, BKR. CLOSED
- G – GREEN INDICATION LAMP, BKR. OPEN
- CS/C– CONTROL SWITCH, CLOSE CONTACT
- CS/T– CONTROL SWITCH, TRIP CONTACT
- AS – AUXILIARY SWITCH
- SD – SECONDARY DISCONNECT

NOTES:
1. FIGURES 4A, 4B, 4C AND 6D NOT AVAILABLE WITH THIS FEATURE.

CLASS "C" WIRING
#14 WIRE SIS. 00-557-286-341
#18 WIRE SIS. 00-557-286-003

□ – SINGLE FASTON TAB, ONE CONNECTION ONLY
○ – MULTIPLE CONNECTIONS POSSIBLE

STANDARD DRAWING
DO NOT DESTROY, CHANGE OR ADD MARK NO'S W/O APPROVAL OF DESIGN ENGINEERING.

USED ON: 2R

* CAD GENERATED, DO NOT CHANGE MANUALLY.

SEE SHEET #1.

02	08-23-93	AHT
01	07-06-93	UPDATED WIRING DIAG. AND SCHEMATIC

Confidential–Property of
Siemens Energy & Automation, Inc.
Electrical Apparatus Division

1-PLACE DECIMAL ± .06
2-PLACE DECIMAL ± .03
3-PLACE DECIMAL ± .01
ANGULAR
MACHINED SURFACE TEXTURE

SIMILAR TO

DR AHT
CH SEM
APP

BULLETIN 07/94

DATA BASE: \R\BKR\8M280YW

MATERIAL FIG. [21E]

N-C 2: C
CURRENT DATE 3-8: 07-30-94
PART NUMBER 9-19: 18-748-279-400
ISS 20-21: 03

TYPE 22
REP 23
PART NAME 24-42: RL WIRING DIAGRAM (SPECIAL)
N.M. 44-48
49-53
SCALE: NTS
CHARACTERISTICS
SHEET NO. 20-24

O:\RLTEMP\21ERLBKR

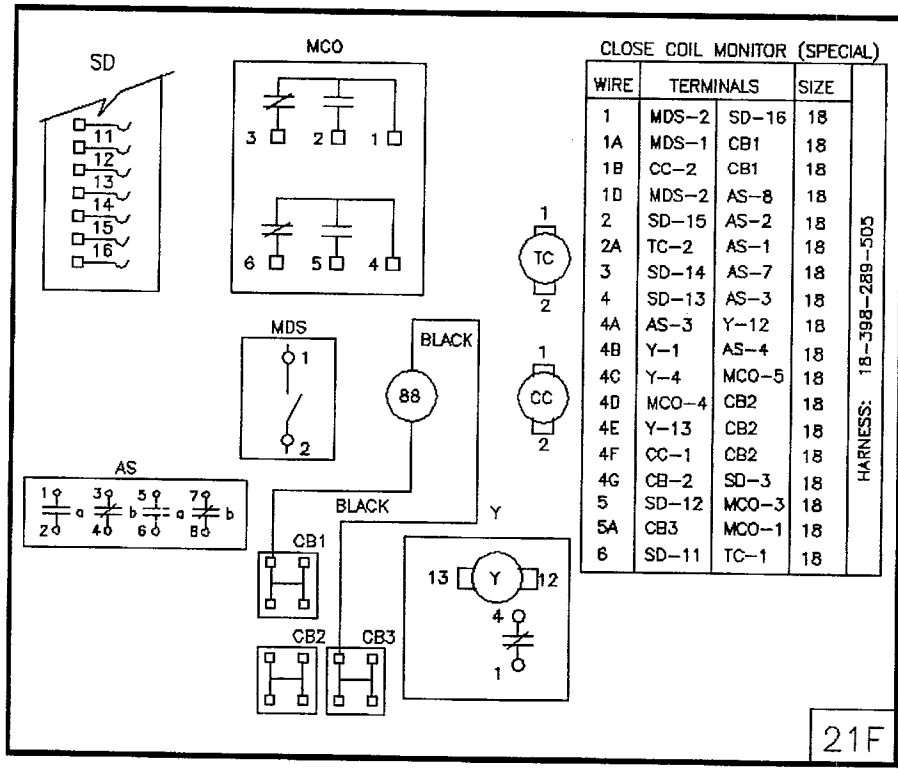

CLOSE COIL MONITOR (SPECIAL)

WIRE	TERMINALS		SIZE	
1	MDS-2	SD-16	18	HARNESS: 18-398-289-505
1A	MDS-1	CB1	18	
1B	CC-2	CB1	18	
1D	MDS-2	AS-8	18	
2	SD-15	AS-2	18	
2A	TC-2	AS-1	18	
3	SD-14	AS-7	18	
4	SD-13	AS-3	18	
4A	AS-3	Y-12	18	
4B	Y-1	AS-4	18	
4C	Y-4	MCO-5	18	
4D	MCO-4	CB2	18	
4E	Y-13	CB2	18	
4F	CC-1	CB2	18	
4G	CB-2	SD-3	18	
5	SD-12	MCO-3	18	
5A	CB3	MCO-1	18	
6	SD-11	TC-1	18	

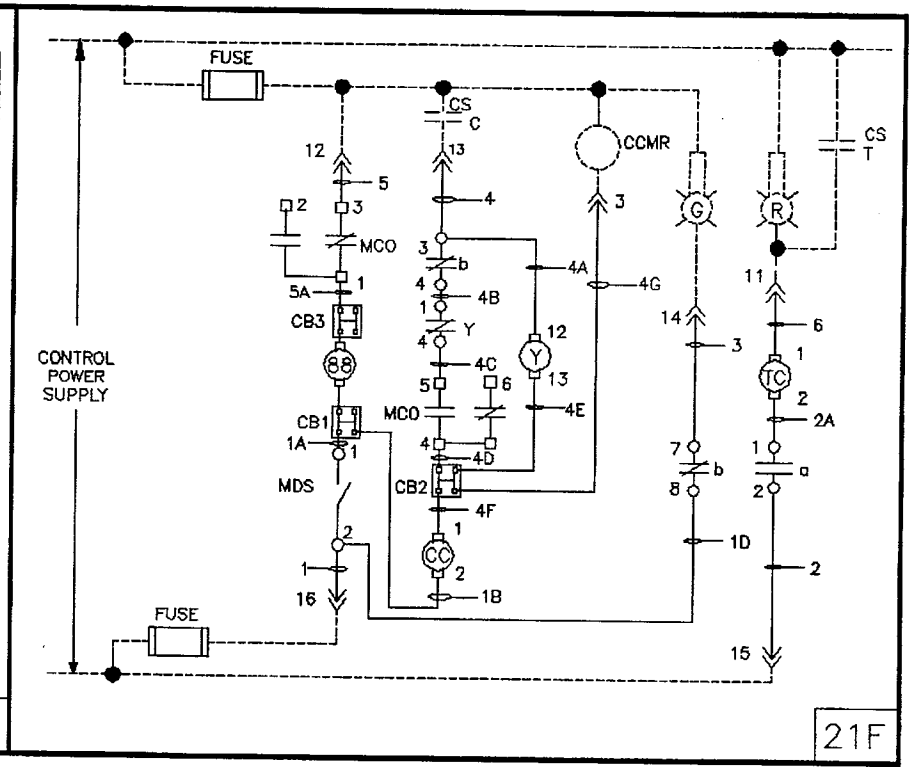

DEVICE LIST

- CC – CLOSING COIL (SPRING RELEASE)
- TC – SHUNT TRIP COIL
- 88 – SPRING CHARGING MOTOR
- MCO – MOTOR CUTOFF SWITCH
- MDS – MOTOR ON-OFF SWITCH
- Y – CLOSING RELAY, ANTI-PUMP
- a – AUXILIARY SWITCH CONTACT OPEN WHEN BREAKER IS OPEN
- b – AUXILIARY SWITCH CONTACT CLOSED WHEN BREAKER IS OPEN
- R – RED INDICATION LAMP, BKR. CLOSED
- G – GREEN INDICATION LAMP, BKR. OPEN
- CS/C– CONTROL SWITCH, CLOSE CONTACT
- CS/T– CONTROL SWITCH, TRIP CONTACT
- AS – AUXILIARY SWITCH
- SD – SECONDARY DISCONNECT

NOTES:
1. FIGURES 3A, 3B, 3C, AND 6D NOT AVAILABLE WITH THIS OPTION.

CLASS "C" WIRING
#14 WIRE SIS. 00-557-286-341
#18 WIRE SIS. 00-557-286-003

□ – SINGLE FASTON TAB, ONE CONNECTION ONLY
○ – MULTIPLE CONNECTIONS POSSIBLE

STANDARD DRAWING
DO NOT DESTROY, CHANGE OR ADD MARK NO'S W/O APPROVAL OF DESIGN ENGINEERING.

USED ON: 2R

* CAD GENERATED, DO NOT CHANGE MANUALLY.

SEE SHEET #1.

02	08-23-93	AHT
01	07-08-93	UPDATED WIRING DWG. AND SCHEMATIC

Confidential–Property of
Siemens Energy & Automation, Inc.
Electrical Apparatus Division

1–PLACE DECIMAL ± .06
2–PLACE DECIMAL ± .03
3–PLACE DECIMAL ± .01
ANGULAR
MACHINED SURFACE TEXTURE
SIMILAR TO
DR AHT
CH SEM
APP SEM
BULLETIN 07/94
DATA BASE \R\BKR\8M280YW

MATERIAL FIG. [21F]

N-C 2	CURRENT DATE 3-8	PART NUMBER 9-19	ISS 20-21
C	07-30-94	18-748-279-400	03

TYPE 22	REP 23	PART NAME 24-43	N.M. 44-48	49-53	SCALE	CHARACTERISTICS	SHEET NO.
		RL WIRING DIAGRAM (SPECIAL)			NTS		21-24

O:\RLTEMP\21FRLBKR

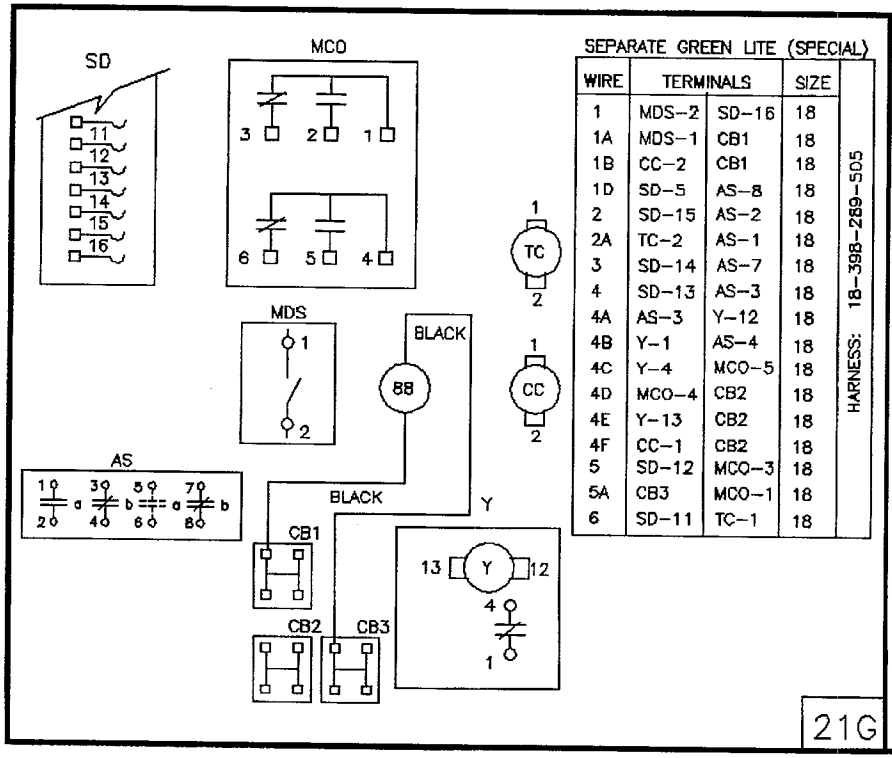

SEPARATE GREEN LITE (SPECIAL)

WIRE	TERMINALS		SIZE	
1	MDS-2	SD-16	18	HARNESS: 18-398-289-505
1A	MDS-1	CB1	18	
1B	CC-2	CB1	18	
1D	SD-5	AS-8	18	
2	SD-15	AS-2	18	
2A	TC-2	AS-1	18	
3	SD-14	AS-7	18	
4	SD-13	AS-3	18	
4A	AS-3	Y-12	18	
4B	Y-1	AS-4	18	
4C	Y-4	MCO-5	18	
4D	MCO-4	CB2	18	
4E	Y-13	CB2	18	
4F	CC-1	CB2	18	
5	SD-12	MCO-3	18	
5A	CB3	MCO-1	18	
6	SD-11	TC-1	18	

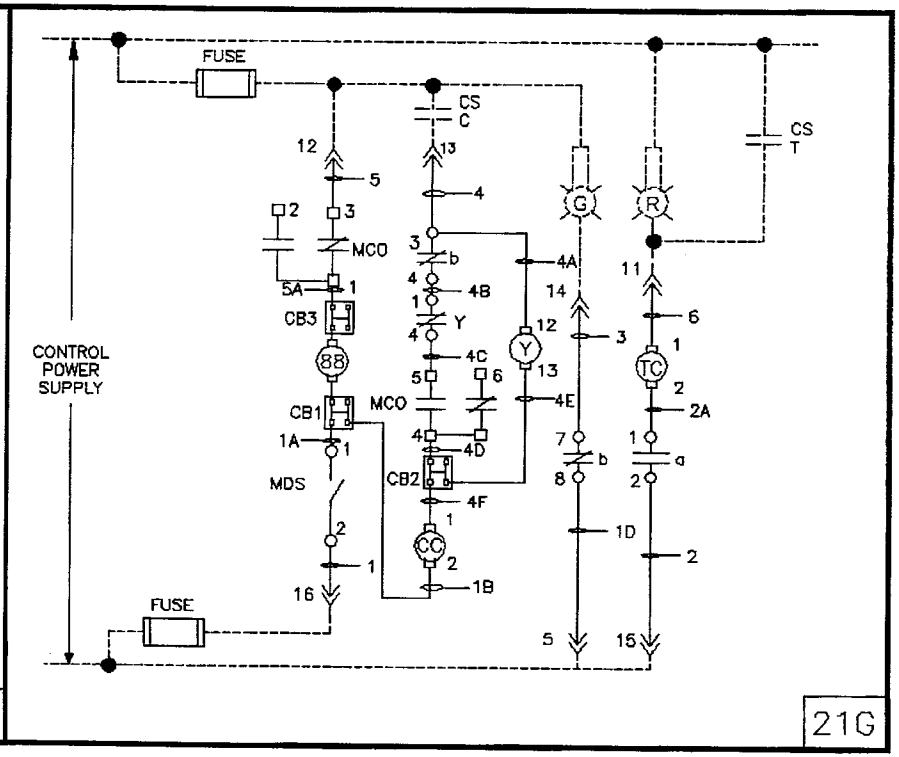

DEVICE LIST

- CC – CLOSING COIL (SPRING RELEASE)
- TC – SHUNT TRIP COIL
- 88 – SPRING CHARGING MOTOR
- MCO – MOTOR CUTOFF SWITCH
- MDS – MOTOR ON-OFF SWITCH
- Y – CLOSING RELAY, ANTI-PUMP
- a – AUXILIARY SWITCH CONTACT OPEN WHEN BREAKER IS OPEN
- b – AUXILIARY SWITCH CONTACT CLOSED WHEN BREAKER IS OPEN
- R – RED INDICATION LAMP, BKR. CLOSED
- G – GREEN INDICATION LAMP, BKR. OPEN
- CS/C – CONTROL SWITCH, CLOSE CONTACT
- CS/T – CONTROL SWITCH, TRIP CONTACT
- AS – AUXILIARY SWITCH
- SD – SECONDARY DISCONNECT

NOTES:
1. FIGURES 5A, 5B, 5C, 5D, 5E, 5F, AND 6D NOT AVAILABLE WITH THIS FEATURE.

CLASS "C" WIRING
#14 WIRE SIS. 00-557-286-341
#18 WIRE SIS. 00-557-286-003

□ – SINGLE FASTON TAB, ONE CONNECTION ONLY
○ – MULTIPLE CONNECTIONS POSSIBLE

STANDARD DRAWING
DO NOT DESTROY, CHANGE OR ADD MARK NO'S W/O APPROVAL OF DESIGN ENGINEERING.
* CAD GENERATED, DO NOT CHANGE MANUALLY.

USED ON: 2R

01	07-06-93	UPDATED WIRING DIAG.
02	08-23-83	AHT AND SCHEMATIC

SEE SHEET #1.

Confidential-Property of
Siemens Energy & Automation, Inc.
Electrical Apparatus Division

1-PLACE DECIMAL ± .06
2-PLACE DECIMAL ± .03
3-PLACE DECIMAL ± .01
ANGULAR
MACHINED SURFACE TEXTURE
SIMILAR TO
DR AHT
CH SEM
APP
BULLETIN 07/94
DATA BASE \R\BKR\8M280YW

MATERIAL FIG. [21G]	N-C 2	CURRENT DATE 3-8	PART NUMBER 9-19	ISS 20-21
	C	07-30-94	18-748-279-400	03

TYPE 22	REP. 23	PART NAME 24-43	N.M. 44-48	49-53	SCALE	CHARACTERISTICS	SHEET NO.
		RL WIRING DIAGRAM (SPECIAL)			NTS		22-24

D:\RLTEMP\21GRLBKR

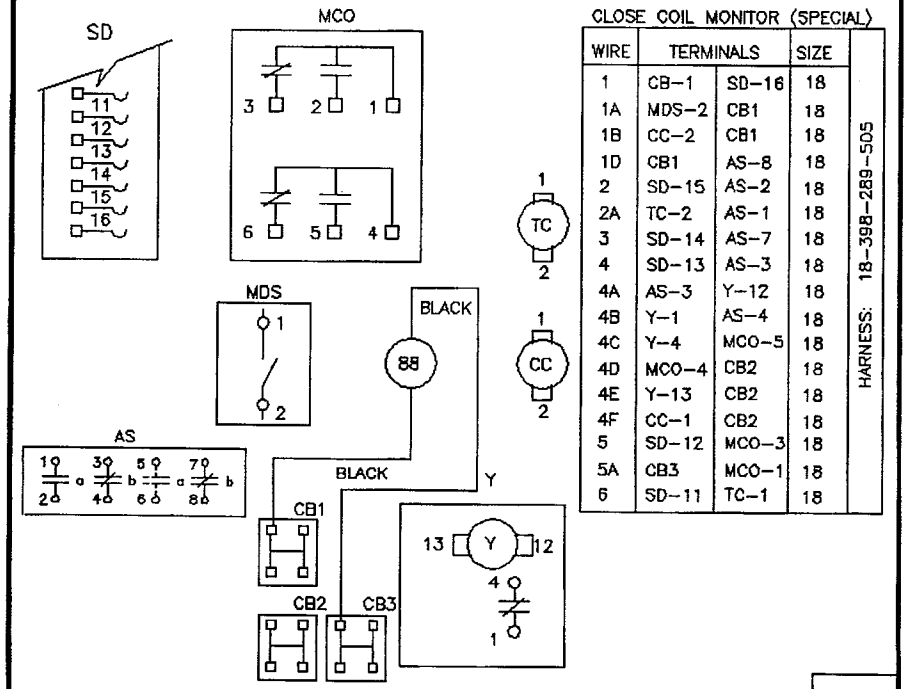

CLOSE COIL MONITOR (SPECIAL)

WIRE	TERMINALS		SIZE	
1	CB-1	SD-16	18	HARNESS: 18-398-289-505
1A	MDS-2	CB1	18	
1B	CC-2	CB1	18	
1D	CB1	AS-8	18	
2	SD-15	AS-2	18	
2A	TC-2	AS-1	18	
3	SD-14	AS-7	18	
4	SD-13	AS-3	18	
4A	AS-3	Y-12	18	
4B	Y-1	AS-4	18	
4C	Y-4	MCO-5	18	
4D	MCO-4	CB2	18	
4E	Y-13	CB2	18	
4F	CC-1	CB2	18	
5	SD-12	MCO-3	18	
5A	CB3	MCO-1	18	
6	SD-11	TC-1	18	

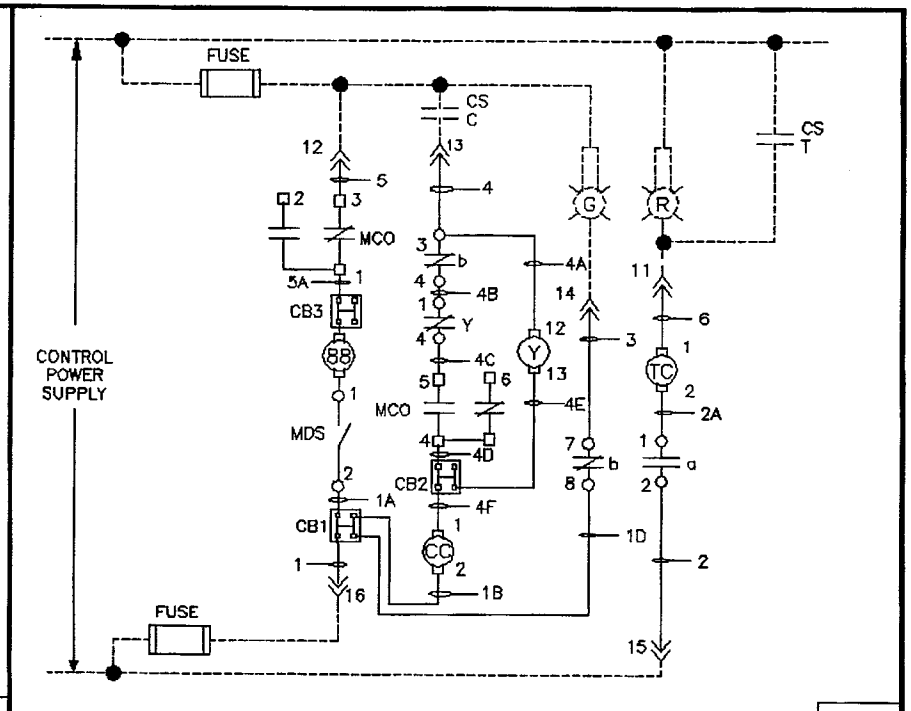

DEVICE LIST

CC – CLOSING COIL (SPRING RELEASE)
TC – SHUNT TRIP COIL
88 – SPRING CHARGING MOTOR
MCO – MOTOR CUTOFF SWITCH
MDS – MOTOR ON-OFF SWITCH
Y – CLOSING RELAY, ANTI-PUMP
a – AUXILIARY SWITCH CONTACT OPEN WHEN BREAKER IS OPEN
b – AUXILIARY SWITCH CONTACT CLOSED WHEN BREAKER IS OPEN
R – RED INDICATION LAMP, BKR. CLOSED
G – GREEN INDICATION LAMP, BKR. OPEN
CS/C– CONTROL SWITCH, CLOSE CONTACT
CS/T– CONTROL SWITCH, TRIP CONTACT
AS – AUXILIARY SWITCH
SD – SECONDARY DISCONNECT

NOTES:
1. FIGURE 6D NOT AVAILABLE WITH THIS FEATURE.

CLASS "C" WIRING
#14 WIRE SIS. 00-557-286-341
#18 WIRE SIS. 00-557-286-003

□ – SINGLE FASTON TAB, ONE CONNECTION ONLY
○ – MULTIPLE CONNECTIONS POSSIBLE

STANDARD DRAWING
DO NOT DESTROY, CHANGE OR ADD MARK NO'S W/O APPROVAL OF DESIGN ENGINEERING.

USED ON: 2R

* CAD GENERATED, DO NOT CHANGE MANUALLY.

SEE SHEET #1.

02	08-23-93	AHT UPDATED WIRING AND SCHEMATIC
01	07-06-93	DWG.

Confidential–Property of
Siemens Energy & Automation, Inc.
Electrical Apparatus Division

1-PLACE DECIMAL ± .06
2-PLACE DECIMAL ± .03
3-PLACE DECIMAL ± .01
ANGULAR
MACHINED SURFACE TEXTURE
SIMILAR TO
DR AHT
CH SEM
APP
BULLETIN 07/94
DATA BASE R\BKR\8M280YW

MATERIAL FIG. [21H]

N-C 2	CURRENT DATE 3-8	PART NUMBER 9-19	ISS 20-21
C	07-30-94	18-748-279-400	03

TYPE 22	REP 23	PART NAME 24-43	N.M. 44-48	49-53	SCALE	CHARACTERISTICS	SHEET NO.
		RL WIRING DIAGRAM (SPECIAL)			NTS		23-24

O:\RLTEMP\21HRLBKR

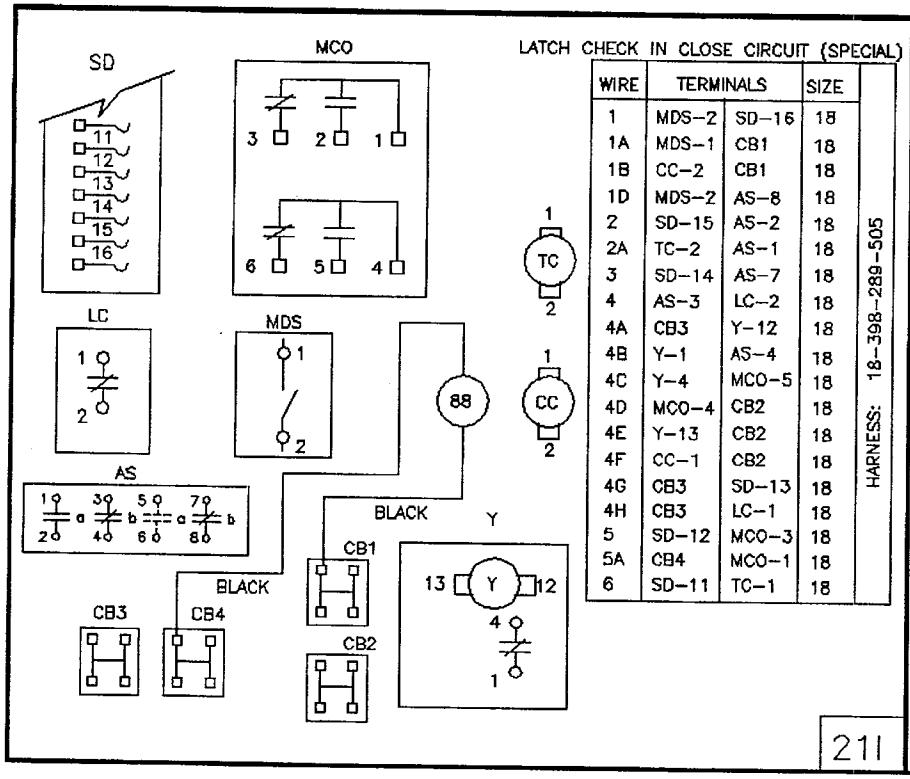

LATCH CHECK IN CLOSE CIRCUIT (SPECIAL)

WIRE	TERMINALS		SIZE	
1	MDS-2	SD-16	18	HARNESS: 18-398-289-505
1A	MDS-1	CB1	18	
1B	CC-2	CB1	18	
1D	MDS-2	AS-8	18	
2	SD-15	AS-2	18	
2A	TC-2	AS-1	18	
3	SD-14	AS-7	18	
4	AS-3	LC-2	18	
4A	CB3	Y-12	18	
4B	Y-1	AS-4	18	
4C	Y-4	MCO-5	18	
4D	MCO-4	CB2	18	
4E	Y-13	CB2	18	
4F	CC-1	CB2	18	
4G	CB3	SD-13	18	
4H	CB3	LC-1	18	
5	SD-12	MCO-3	18	
5A	CB4	MCO-1	18	
6	SD-11	TC-1	18	

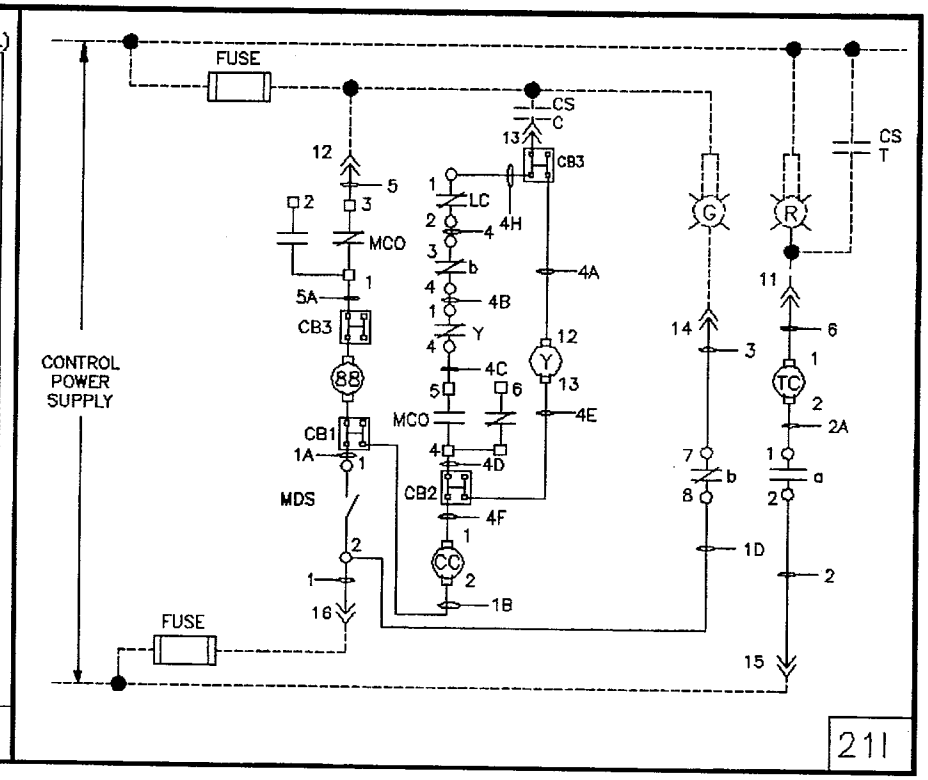

DEVICE LIST

- CC – CLOSING COIL (SPRING RELEASE)
- TC – SHUNT TRIP COIL
- 88 – SPRING CHARGING MOTOR
- MCO – MOTOR CUTOFF SWITCH
- MDS – MOTOR ON-OFF SWITCH
- Y – CLOSING RELAY, ANTI-PUMP
- a – AUXILIARY SWITCH CONTACT OPEN WHEN BREAKER IS OPEN
- b – AUXILIARY SWITCH CONTACT CLOSED WHEN BREAKER IS OPEN
- R – RED INDICATION LAMP, BKR. CLOSED
- G – GREEN INDICATION LAMP, BKR. OPEN
- CS/C – CONTROL SWITCH, CLOSE CONTACT
- CS/T – CONTROL SWITCH, TRIP CONTACT
- AS – AUXILIARY SWITCH
- SD – SECONDARY DISCONNECT

NOTES:
1. FIGURE 6D NOT AVAILABLE WITH THIS FEATURE.

CLASS "C" WIRING
#14 WIRE SIS. 00-557-286-341
#18 WIRE SIS. 00-557-286-003

□ – SINGLE FASTON TAB, ONE CONNECTION ONLY
○ – MULTIPLE CONNECTIONS POSSIBLE

STANDARD DRAWING
DO NOT DESTROY, CHANGE OR ADD MARK NO'S W/O APPROVAL OF DESIGN ENGINEERING.
* CAD GENERATED, DO NOT CHANGE MANUALLY.

USED ON: 2R1

01	07-06-93	UPDATED WIRING DWG.
02	08-23-93	AND SCHEMATIC
SEE SHEET #1.		AHT

Confidential—Property of Siemens Energy & Automation, Inc. Electrical Apparatus Division

1-PLACE DECIMAL ± .06
2-PLACE DECIMAL ± .03
3-PLACE DECIMAL ± .01
ANGULAR
MACHINED SURFACE TEXTURE
SIMILAR TO
DR AHT
CH SEM
APP
BULLETIN 07/94
DATA BASE \R\BKR\8M280YW

MATERIAL FIG. [211]	N-C 2	CURRENT DATE 3-8	PART NUMBER 9-19	ISS 20-21
	C	07-30-94	18-748-279-400	03

TYPE 22	REP. 23	PART NAME 24-43	N.M. 44-48	49-53	SCALE	CHARACTERISTICS	SHEET NO.
		RL WIRING DIAGRAM (SPECIAL)			NTS		24-24

O:\RLTEMP\211RLBKR