DH362NRK Safety Switch

## 1.1 Safety Switches


Product Overview . . . . . V2-T1-2
Cross-Reference . . . . . V2-T1-3
Catalog Number Selection . . . . . V2-T1-11
Options and Accessories . . . . . V2-T1-13
Modifications—Flex Center . . . . . V2-T1-15
Technical Data and Specifications . . . . . V2-T1-16
Short-Circuit Ratings of Non-Fusible Switches . . . . . V2-T1-21
Dimensions . . . . . V2-T1-23
General-Duty . . . . . V2-T1-25
Heavy-Duty . . . . . V2-T1-30
Heavy-Duty 800 Vac and 1000 Vac Switches . . . . . V2-T1-39
Heavy-Duty Double-Door Safety Switch . . . . . V2-T1-41
Six-Pole Switches . . . . . V2-T1-45
Double-Throw Switches . . . . . V2-T1-48
EnviroLine Stainless Steel Switch . . . . . V2-T1-55
Window Switches . . . . . V2-T1-59
Receptacle Switches . . . . . V2-T1-62
Non-Metallic KRYDON Switch . . . . . V2-T1-64
Shunt Trip Safety Switch . . . . . V2-T1-67
NEMA 7/9—Hazardous Location Disconnect Switch . . . . . V2-T1-70
Quick-Connect Switches . . . . . V2-T1-72
DC Disconnect Switches . . . . . V2-T1-77
Mill-Duty Rated, Heavy-Duty Safety Switch . . . . . V2-T1-86
Elevator Control Switch . . . . . V2-T1-88
Auxiliary Power Heavy-Duty Safety Switch . . . . . V2-T1-91
Left-Handed Safety Switch . . . . . V2-T1-95
Heavy-Duty Surge Switch . . . . . V2-T1-96
OEM Line Isolation (OLI) Switch . . . . . V2-T1-98
Pringle Bolted Pressure Switch . . . . . V2-T1-101
Type DS, Fusible and Non-Fusible . . . . . V2-T1-104
Type Visi-Flex DE-ION . . . . . V2-T1-107
Flange Mounted—Variable Depth . . . . . V2-T1-111
Flange Mounted—Fixed Depth . . . . . V2-T1-115


## 1.2 Enclosed Circuit Breakers


Enclosed Circuit Breakers—Power Defense . . . . . V2-T1-117
Features . . . . . V2-T1-118
Standards and Certifications . . . . . V2-T1-118
Catalog Number Selection . . . . . V2-T1-119
Product Selection . . . . . V2-T1-120
Dimensions . . . . . V2-T1-122
Power Xpert Enclosed Circuit Breakers . . . . . V2-T1-124
Product Selection . . . . . V2-T1-127
Wiring Diagram . . . . . V2-T1-128
Dimensions . . . . . V2-T1-129
Enclosed NRX Power Circuit Breakers . . . . . V2-T1-130
Catalog Number Selection . . . . . V2-T1-132
Product Selection . . . . . V2-T1-132
Technical Data and Specifications . . . . . V2-T1-132
Dimensions . . . . . V2-T1-133
Flex Center . . . . . V2-T1-134


## 1.3 Enclosed Rotary Disconnects


Product Overview . . . . . V2-T1-135
Features, Benefits and Functions . . . . . V2-T1-135
Standards and Certifications . . . . . V2-T1-135
Product Selection . . . . . V2-T1-136
Dimensions . . . . . V2-T1-137

1

## Product Overview

### Product Selection Guide

#### Safety Switch

| Switch Type | NEMA Rating | Fused/non-fused | Number of Poles 1 | 2 | 3 | 4 | 6 |
|---|---|---|---|---|---|---|---|
| Heavy-duty single-throw | NEMA 1 | Fused and non-fused ① | — | 30–800 A | 30–1200 A | 30–600 A | — |
| | NEMA 3R | Fused and non-fused ② | 30–600 A | 30–800 A | 30–1200 A | — | — |
| | NEMA 12/3R | Fused and non-fused ①② | 30–600 A | 30–800 A | 30–1200 A | 30–600 A | 30–200 A |
| | NEMA 4 | Fused and non-fused | — | 400–800 A | 400–800 A | — | — |
| | NEMA 7/9 | Fused and non-fused ③ | — | — | 30–100 A | — | — |
| | NEMA 4X non-metallic | Fused and non-fused ③ | — | — | 30–200 A | — | — |
| | NEMA 4X stainless steel (304 or 316 Grade) | Fused and non-fused ①② | 30–600 A | 30–800 A | 30–1200 A | 30–600 A | 30–200 A |
| General-duty single-throw | NEMA 1 and 3R | Fused | — | 30–600 A | 30–600 A | — | — |
| | NEMA 1 | Non-fused | — | 30–100 A | 30–600 A | — | — |
| | NEMA 3R | Non-fused | — | 30–200 A | 30–600 A | — | — |
| Heavy-duty double-throw | NEMA 1 | Fused | — | 200 A | 30–1200 A | — | — |
| | NEMA 3R | Fused ④ | — | 200 A | 100–1200 A | — | — |
| | NEMA 12/3R | Fused | — | — | 30–400 A | — | — |
| | NEMA 4X stainless steel (304 or 316 Grade) | Fused | — | — | 30–400 A | — | — |
| | NEMA 1 | Non-fused | — | 30–1200 A | 30–1200 A | 200–800 A | — |
| | NEMA 3R | Non-fused ④ | — | 200–1200 A | 30–1200 A | 30–800 A | 30–100 A |
| | NEMA 12/3R | Non-fused | — | — | 30–800 A | — | — |
| | NEMA 4X stainless steel (304 or 316 Grade) | Non-fused | — | — | 30–800 A | — | — |
| General-duty double-throw | NEMA 3R | Non-fused | — | 30–400 A | — | — | — |
| Shunt trip safety switches | NEMA 12/3R, 4, 4X stainless steel (304 or 316 stainless steel) | Fused and non-fused | — | 30–1200 A | 30–1200 A | 30–400 A | — |
| Window switches | NEMA 12/3R and 4X stainless steel (304 or 316 Grade) | Fused and non-fused ① | — | 30–1200 A | 30–1200 A | 30–600 A | 30–200 A |
| EnviroLine stainless steel switch | NEMA 4X (304 or 316-Grade) | Fused and non-fused ⑤ | — | 30–400 A | 30–400 A | — | — |
| Mill duty switches | NEMA 12/3R and 4X stainless steel (304 or 316 Grade) | Fused and non-fused | — | 30–600 A | 30–600 A | — | — |
| Quick connect double-throw | NEMA 1 and 3R | Fused and non-fused ④ | — | 100–1200 A | 100–1200 A | 100–1200 A | — |
| Quick connect single-throw | NEMA 1 and 3R | Fused and non-fused ④ | — | 100–1200 A | 100–1200 A | 100–1200 A | — |
| Elevator control switches | NEMA 1, 3R, 4, and 12 | Fused | — | — | 30–400 A | — | — |
| OEM Line Isolation Switches (OLI) | NEMA 12/3R and 4X stainless steel (304 or 316 Grade) | Fused and non-fused | — | 30–400 A | 30–400 A | — | — |
| Receptacle switches | NEMA 12/3R and 4X stainless steel (304 or 316 Grade) | Fused and non-fused ⑥ | — | — | 30–100 A | — | — |
| Auxiliary power switch | NEMA 3R | Fused and non-fused ④ | — | — | 30–200 A | — | — |
| Left-handed switches | NEMA 1, 3R, 12/3R, and 4X stainless steel (304 or 316 Grade) | Fused and non-fused ⑦ | — | — | 30–200 A | — | — |
| Surge switches | NEMA 12/3R and 4X stainless steel (304 or 316 Grade) | Fused and non-fused | — | 30–1200 A | 30–1200 A | — | — |
| Heavy-duty double-door | NEMA 12/3R and 4X stainless steel (304 or 316 Grade) | Fused | — | 30–1200 A | 30–1200 A | — | — |
| Enclosed rotary | NEMA 1, 12/3R and 4X stainless steel | Non-fused | — | — | 16–80 A | 16–80 A | — |
| | NEMA 4X non-metallic | Non-fused | — | — | 16–80 A | 16–80 A | — |
| | NEMA 4X polycarbonate non-metallic | Non-fused | — | — | 30 A and 60 A | 16–80 A | — |

***Notes***

① 400–800 A 6-pole, and 800 A four-pole heavy-duty, single-throw switches are non-UL® Listed and available.

② Single-pole product is the single circuit 600 Vdc switch series.

③ No viewing windows or other enclosure modifications are available with this product.

④ NEMA 3R stainless versions are available and are UL Listed.

⑤ EnviroLine stainless steel switches have stainless steel enclosures, sub pans, handles, and mechanisms.

⑥ Switches with non-standard receptacles or at higher amperages are non-UL Listed and available.

⑦ All left-handed switches are non-UL Listed. Higher amperages are not available.

## Cross-Reference

### General-Duty

| Ampere Rating | Catalog Number Eaton | General Electric | Siemens | Square D |
|---|---|---|---|---|
| **Fusible, Two-Pole, Three-Wire, 240 Vac, NEMA 1** | | | | |
| 30 | **DG221NGB** | TG3221 | GF221N | D221N |
| 60 | **DG222NGB** | TG3222 | GF222N | D222N |
| 100 | **DG223NGB** | TG3223 | GF223N | D223N |
| 200 | **DG224NGK** | TG3224 | GF224N | D224N |
| 400 | **DG225NGK** | TG3225 | GF225N | D225N |
| 600 | **DG226NGK** | TG3226 | GF226N | D226N |
| **Fusible, Three-Pole, Three-Wire, 240 Vac, NEMA 1** | | | | |
| 30 | **DG321FGB** | TG4321 | GF321N | D321N |
| 60 | **DG322FGB** | TG4322 | GF322N | D322N |
| 100 | **DG323FGB** | TG4323 | GF323N | D323N |
| 200 | **DG324FGK** | TG4324 | GF324N | D324N |
| 400 | **DG325FGK** | TG3325 | GF325N | D325N |
| 600 | **DG326FGK** | TG3326 | GF326N | D326N |
| **Fusible, Three-Pole, Four-Wire, 240 Vac, NEMA 1** | | | | |
| 30 | **DG321NGB** | TG4321 | GF321N | D321N |
| 60 | **DG322NGB** | TG4322 | GF322N | D322N |
| 100 | **DG323NGB** | TG4323 | GF323N | D323N |
| 200 | **DG324NGK** | TG4324 | GF324N | D324N |
| 400 | **DG325NGK** | TG4325 | GF325N | D325N |
| 600 | **DG326NGK** | TG4326 | GF326N | D326N |
| **Non-Fusible, Two-Pole, Two-Wire, 240 Vac, NEMA 1** | | | | |
| 30 | **DG221UGB** | TGN3321 | N/A | N/A |
| 60 | **DG222UGB** | TGN3322 | N/A | QO260NATS |
| 100 | **DG223UGB** | TGN3323 | N/A | QO2000NS |
| 200 | **DG324UGK** | TGN3324 | N/A | DU324 |
| 400 | **DG325UGK** | TGN3325 | N/A | DU325 |
| 600 | **DG326UGK** | TGN3326 | N/A | DU326 |
| **Non-Fusible, Three-Pole, Three-Wire, 240 Vac, NEMA 1** | | | | |
| 30 | **DG321UGB** | TGN3321 | GNF321 | DU321 |
| 60 | **DG322UGB** | TGN3322 | GNF322 | DU322 |
| 100 | **DG323UGB** | TGN3323 | GNF323 | DU323 |
| 200 | **DG324UGK** | TGN3324 | GNF324 | DU324 |
| 400 | **DG325UGK** | TGN3325 | GNF325 | DU325 |
| 600 | **DG326UGK** | TGN3326 | GNF326 | DU326 |

### General-Duty, continued

| Ampere Rating | Catalog Number Eaton | General Electric | Siemens | Square D |
|---|---|---|---|---|
| **Fusible, Two-Pole, Three-Wire, 240 Vac, NEMA 3R** | | | | |
| 30 | **DG221NRB** | TG3221R | GF221NR | D221NRB |
| 60 | **DG222NRB** | TG3222R | GF222NR | D222NRB |
| 100 | **DG223NRB** | TG3223R | GF223NR | D223NRB |
| 200 | **DG224NRK** | TG3224R | GF224NR | D224NRB |
| 400 | **DG225NRK** | TG3225R | GF225NR | D225NR |
| 600 | **DG226NRK** | TG3226R | GF226NR | D226NR |
| **Fusible, Three-Pole, Three-Wire, 240 Vac, NEMA 3R** | | | | |
| 30 | **DG321FRB** | TG4321R | GF321NR | D321NRB |
| 60 | **DG322FRB** | TG4322R | GF322NR | D322NRB |
| 100 | **DG323FRB** | TG4323R | GF323NR | D323NRB |
| 200 | **DG324FRK** | TG4324R | GF324NR | D324NRB |
| 400 | **DG325FRK** | TG3325R | GF325NR | D325NR |
| 600 | **DG326FRK** | TG3326R | GF326NR | D326NR |
| **Fusible, Three-Pole, Four-Wire, 240 Vac, NEMA 3R** | | | | |
| 30 | **DG321NRB** | TG4321R | GF321NR | D321NRB |
| 60 | **DG322NRB** | TG4322R | GF322NR | D322NRB |
| 100 | **DG323NRB** | TG4323R | GF323NR | D323NRB |
| 200 | **DG324NRK** | TG4324R | GF324NR | D324NRB |
| 400 | **DG325NRK** | TG3325R ① | GF325NR | D325NR |
| 600 | **DG326NRK** | TG3326R ① | GF326NR | D326NR |
| **Non-Fusible, Two-Pole, Two-Wire, 240 Vac, NEMA 3R** | | | | |
| 30 | **DG221URB** | TGN3321R | GNF321R | DU221RB |
| 60 | **DG222URB** | TGN3322R | GNF322R | DU222RB |
| 100 | **DG223URB** | TGN3323R | GNF323R | QO2000NRB |
| 200 | **DG324URK** | TGN3324R | GNF324R | DU324RB |
| **Non-Fusible, Three-Pole, Three-Wire, 240 Vac, NEMA 3R** | | | | |
| 30 | **DG321URB** | TGN3321R | GNF321R | DU321RB |
| 60 | **DG322URB** | TGN3322R | GNF322R | DU322RB |
| 100 | **DG323URB** | TGN3323R | GNF323R | DU323RB |
| 200 | **DG324URK** | TGN3324R | GNF324R | DU324RB |
| 400 | **DG325URK** | N/A | N/A | N/A |
| 600 | **DG326URK** | N/A | N/A | N/A |

***Notes***

① Separate neutral kit required.

Always verify the number of poles and wires required since catalog numbers may appear in multiple tables.

## Heavy-Duty

| Ampere Rating | Catalog Number Eaton | General Electric | Siemens | Square D |
|---|---|---|---|---|
| **Fusible, Two-Pole, Two-Wire, 240 Vac, NEMA 1** | | | | |
| 30 | **DH221FGK** | TH3221 | N/A | H221N |
| 60 | **DH222FGK** | TH3222 | N/A | H222N |
| 100 | **DH223FGK** | TH3223 | N/A | H223N |
| 200 | **DH224FGK** | TH3224 | N/A | H224N |
| 400 | **DH225FGK** | TH3225 | N/A | H225 |
| 600 | **DH226FGK** | TH3226 | N/A | H226 |
| 800 | **DH227FGK** | TC72267 | N/A | H227 |
| 1200 | **DH328FGK** | TC72268 | N/A | H228 |
| **Fusible, Two-Pole, Three-Wire, 240 Vac, NEMA 1** | | | | |
| 30 | **DH221NGK** | TH3221 | HF221N | H221N |
| 60 | **DH222NGK** | TH3222 | HF222N | H222N |
| 100 | **DH223NGK** | TH3223 | HF223N | H223N |
| 200 | **DH224NGK** | TH3224 | HF224N | H224N |
| 400 | **DH225NGK** | TH3225 | HF225N | H225N |
| 600 | **DH226NGK** | TH3226 | HF226N | H226N |
| 800 | **DH227NGK** | TC72267 ① | HF227N | H227N |
| 1200 | **DH328NGK** | TC72268 ① | HF228N | H228N |
| **Fusible, Three-Pole, Three-Wire, 240 Vac, NEMA 1** | | | | |
| 30 | **DH321FGK** | TH4321 | N/A | H321N |
| 60 | **DH322FGK** | TH4322 | N/A | H322N |
| 100 | **DH323FGK** | TH4323 | N/A | H323N |
| 200 | **DH324FGK** | TH4324 | N/A | H324N |
| 400 | **DH325FGK** | TH3325 | N/A | H325 |
| 600 | **DH326FGK** | TH3326 | N/A | H326 |
| 800 | **DH327FGK** | TC72367 | N/A | H327 |
| 1200 | **DH328FGK** | TC72368 | N/A | H328 |
| **Fusible, Three-Pole, Four-Wire, 240 Vac, NEMA 1** | | | | |
| 30 | **DH321NGK** | TH4321 | HF321N | H321N |
| 60 | **DH322NGK** | TH4322 | HF322N | H322N |
| 100 | **DH323NGK** | TH4323 | HF323N | H323N |
| 200 | **DH324NGK** | TH4324 | HF324N | H324N |
| 400 | **DH325NGK** | TH4325 | HF325N | H325N |
| 600 | **DH326NGK** | TH4326 | HF326N | H326N |
| 800 | **DH327NGK** | TC72367 ① | HF327N | H327N |
| 1200 | **DH328NGK** | TC72368 ① | HF328N | H328N |
| **Fusible, Four-Pole, Four-Wire, 240 Vac, NEMA 1** | | | | |
| 30 | **DH421FGK** | N/A | F421 | H461 ② |
| 60 | **DH422FGK** | N/A | F422 | H462 ② |
| 100 | **DH423FGK** | N/A | F423 | H463 ② |
| 200 | **DH424FGK** | N/A | F424 | H464 ② |
| 400 | **DH425FGK** | N/A | F425 | H465 ② |
| 600 | **DH426FGK** | N/A | F426 | H466 ② |

## Heavy-Duty, continued

| Ampere Rating | Catalog Number Eaton | General Electric | Siemens | Square D |
|---|---|---|---|---|
| **Non-Fusible, Three-Pole, Three-Wire, 240 Volt/600 Vac, NEMA 1** | | | | |
| 30 | **DH361UGK** | THN3361 | HNF361 | HU361 |
| 60 | **DH362UGK** | THN3362 | HNF362 | HU362 |
| 100 | **DH363UGK** | THN3363 | HNF363 | HU363 |
| 200 | **DH364UGK** | THN3364 | HNF364 | HU364 |
| 400 | **DH365UGK** | THN3365 | HNF365 | HU365 |
| 600 | **DH366UGK** | THN3366 | HNF366 | HU366 |
| 800 | **DH367UGK** | TC36367 | HNF367 | HU367 |
| 1200 | **DH368UGK** | TC36368 | HNF368 | HU368 |
| **Fusible, Two-Pole, Two-Wire, 240 Vac, NEMA 3R** | | | | |
| 30 | **DH221FRK** | TH3221R | N/A | H221NRB |
| 60 | **DH222FRK** | TH3222R | N/A | H222NRB |
| 100 | **DH223FRK** | TH3223R | N/A | H223NRB |
| 200 | **DH224FRK** | TH3224R | N/A | H224NRB |
| 400 | **DH225FRK** | TH3225R | N/A | H225R |
| 600 | **DH226FRK** | TH3226R | N/A | H226R |
| 800 | **DH227FRK** | TC72267R | N/A | H227R |
| 1200 | **DH328FRK** | TC72268R | N/A | H228R |
| **Fusible, Two-Pole, Three-Wire, 240 Vac, NEMA 3R** | | | | |
| 30 | **DH221NRK** | TH3221R | HF221NR | H221NRB |
| 60 | **DH222NRK** | TH3222R | HF222NR | H222NRB |
| 100 | **DH223NRK** | TH3223R | HF223NR | H223NRB |
| 200 | **DH224NRK** | TH3224R | HF224NR | H224NRB |
| 400 | **DH225NRK** | TH3225R | HF225NR | H225NR |
| 600 | **DH226NRK** | TH3226R | HF226NR | H226NR |
| 800 | **DH227NRK** | TC72267R ① | HF227NR | H227NR |
| 1200 | **DH328NRK** | TC72268R ① | HF228NR | H228NR |
| **Fusible, Three-Pole, Three-Wire, 240 Vac, NEMA 3R** | | | | |
| 30 | **DH321FRK** | TH4321R | N/A | H321NRB |
| 60 | **DH322FRK** | TH4322R | N/A | H322NRB |
| 100 | **DH323FRK** | TH4323R | N/A | H323NRB |
| 200 | **DH324FRK** | TH4324R | N/A | H324NRB |
| 400 | **DH325FRK** | TH3325R | N/A | H325NR |
| 600 | **DH326FRK** | TH3326R | N/A | H326NR |
| 800 | **DH327FRK** | TC72367R | N/A | H327NR |
| 1200 | **DH328FRK** | TC72368R | N/A | H328NR |

***Notes***

① Separate neutral kit required.

② 600 V switch.

Always verify the number of poles and wires required since catalog numbers may appear in multiple tables.

## Heavy-Duty, continued

| Ampere Rating | Catalog Number Eaton | General Electric | Siemens | Square D |
|---|---|---|---|---|
| **Fusible, Three-Pole, Four-Wire, 240 Vac, NEMA 3R** | | | | |
| 30 | **DH321NRK** | TH4321R | HF321NR | H321NRB |
| 60 | **DH322NRK** | TH4322R | HF322NR | H322NRB |
| 100 | **DH323NRK** | TH4323R | HF323NR | H323NRB |
| 200 | **DH324NRK** | TH4324R | HF324NR | H324NRB |
| 400 | **DH325NRK** | TH3325R ① | HF325NR | H325R |
| 600 | **DH326NRK** | TH3326R ① | HF326NR | H326R |
| 800 | **DH327NRK** | TC72367R ① | HF327NR | H327R |
| 1200 | **DH328NRK** | TC72368R ① | HF328NR | H328R |
| **Non-Fusible, Three-Pole, Three-Wire, 240 Volt/600 Vac, NEMA 3R** | | | | |
| 30 | **DH361URK** | THN3361R | HNF361R | HU361RB |
| 60 | **DH362URK** | THN3362R | HNF362R | HU362RB |
| 100 | **DH363URK** | THN3363R | HNF363R | HU363RB |
| 200 | **DH364URK** | THN3364R | HNF364R | HU364RB |
| 400 | **DH365URK** | THN3365R | HNF365R | HU365R |
| 600 | **DH366URK** | THN3366R | HNF366R | HU366R |
| 800 | **DH367URK** | N/A | HNF367R | HU367R |
| 1200 | **DH368URK** | N/A | HNF368R | HU368R |
| **Fusible, Two-Pole, Two-Wire, 240 Vac, NEMA 4/4X** | | | | |
| 30 | **DH221FWK** | TH2221SS | HF221S | H221DS |
| 60 | **DH222FWK** | TH2222SS | HF222S | H222DS |
| 100 | **DH223FWK** | TH3223SS | HF223S | H223DS |
| 200 | **DH224FWK** | TH3224SS | HF224S | H224DS |
| 400 | **DH225FWK** | TH3225SS | HF325S | H225DS |
| 600 | **DH226FWK** | TH3226SS | HF326S | H226DS |
| **Fusible, Two-Pole, Three-Wire, 240 Vac, NEMA 4/4X** | | | | |
| 30 | **DH221NWK** | TH3221SS | HF321S ① | H221DS ① |
| 60 | **DH222NWK** | TH3222SS | HF322S ① | H222DS ① |
| 100 | **DH223NWK** | TH3223SS | HF323S ① | H223DS ① |
| 200 | **DH224NWK** | TH3224SS | HF324S ① | H224DS ① |
| 400 | **DH225NWK** | TH3225SS | HF325S ① | H225NDS |
| 600 | **DH226NWK** | TH3226SS | HF326S ① | H226NDS |
| 800 | **DH227NWK** | N/A | HF327S ① | N/A |
| **Fusible, Three-Pole, Three-Wire, 240 Vac, NEMA 4/4X** | | | | |
| 30 | **DH321FWK** | TH3321SS | HF321S | H321DS |
| 60 | **DH322FWK** | TH3322SS | HF322S | H322DS |
| 100 | **DH323FWK** | TH4323SS | HF323S | H323DS |
| 200 | **DH324FWK** | TH4324SS | HF324S | H324DS |
| 400 | **DH325FWK** | TH4325SS | HF325S | H325DS |
| 600 | **DH326FWK** | TH4326SS | HF326S | H326DS |
| 800 | **DH327FWK** | N/A | HF327S | N/A |
| **Fusible, Three-Pole, Four-Wire, 240 Vac, NEMA 4/4X** | | | | |
| 30 | **DH321NWK** | TH4321SS | HF321S ① | H321DS ① |
| 60 | **DH322NWK** | TH4322SS | HF322S ① | H322DS ① |
| 100 | **DH323NWK** | TH4323SS | HF323S ① | H323DS ① |
| 200 | **DH324NWK** | TH4324SS | HF324S ① | H324DS ① |
| 400 | **DH325NWK** | TH4325SS | HF325S ① | H325NDS |
| 600 | **DH326NWK** | TH4326SS | HF326S ① | H326NDS |

## Heavy-Duty, continued

| Ampere Rating | Catalog Number Eaton | General Electric | Siemens | Square D |
|---|---|---|---|---|
| **Fusible, Two-Pole, Two-Wire, 240 Vac, NEMA 12/3R** | | | | |
| 30 | **DH221FDK** | TH2221J | HF221J | H221AWK |
| 60 | **DH222FDK** | TH2222J | HF222J | H222AWK |
| 100 | **DH223FDK** | TH3223J | HF223J | H223AWK |
| 200 | **DH224FDK** | TH3224J | HF224J | H224AWK |
| 400 | **DH225FDK** | TH3225J | HF325J | H225AWK |
| 600 | **DH226FDK** | TH3226J | HF326J | H226AWK |
| 800 | **DH227FDK** | N/A | HF327J | H227AWK |
| 1200 | **N/A** | N/A | N/A | H228AWK |
| **Fusible, Two-Pole, Three-Wire, 240 Vac, NEMA 12/3R** | | | | |
| 30 | **DH221NDK** | TH3221J | HF221J ① | H221AWK |
| 60 | **DH222NDK** | TH3222J | HF222J ① | H222AWK |
| 100 | **DH223NDK** | TH3223J | HF223J ① | H223AWK |
| 200 | **DH224NDK** | TH3224J | HF224J ① | H224AWK |
| 400 | **DH225NDK** | TH3225J | HF325J ① | H225NAWK |
| 600 | **DH226NDK** | TH3226J | HF326J ① | H226NAWK |
| 800 | **DH227NDK** | N/A | HF327J ① | H227NAWK |
| 1200 | **N/A** | N/A | N/A | H228NAWK |
| **Fusible, Three-Pole, Three-Wire, 240 Vac, NEMA 12/3R** | | | | |
| 30 | **DH321FDK** | TH3321J | HF321J | H321AWK |
| 60 | **DH322FDK** | TH3322J | HF322J | H322AWK |
| 100 | **DH323FDK** | TH4323J | HF323J | H323AWK |
| 200 | **DH324FDK** | TH4324J | HF324J | H324AWK |
| 400 | **DH325FDK** | TH4325J | HF325J | H325AWK |
| 600 | **DH326FDK** | TH4326J | HF326J | H326AWK |
| 800 | **DH327FDK** | N/A | HF327J | H327AWK |
| 1200 | **N/A** | N/A | N/A | H328AWK |
| **Fusible, Three-Pole, Four-Wire, 240 Vac, NEMA 12/3R** | | | | |
| 30 | **DH321NDK** | TH4321J | HF321J ① | H321AWK ① |
| 60 | **DH322NDK** | TH4322J | HF322J ① | H322AWK ① |
| 100 | **DH323NDK** | TH4323J | HF323J ① | H323AWK ① |
| 200 | **DH324NDK** | TH4324J | HF324J ① | H324AWK ① |
| 400 | **DH325NDK** | TH4325J | HF325J ① | H325NAWK |
| 600 | **DH326NDK** | TH4326J | HF326J ① | H326NAWK |
| 800 | **N/A** | N/A | HF327J ① | H327NAWK |
| 1200 | **N/A** | N/A | N/A | H328NAWK |
| **Fusible, Four-Pole, Four-Wire, 240 Vac, NEMA 12/3R** | | | | |
| 30 | **DH421FDK** | N/A | N/A | N/A |
| 60 | **DH422FDK** | N/A | N/A | N/A |
| 100 | **DH423FDK** | N/A | N/A | N/A |
| 200 | **DH424FDK** | N/A | N/A | N/A |

***Notes***

① Separate neutral kit required.

Always verify the number of poles and wires required since catalog numbers may appear in multiple tables.

## Heavy-Duty, continued

| Ampere Rating | Catalog Number Eaton | General Electric | Siemens | Square D |
|---|---|---|---|---|
| **Fusible, Two-Pole, Two-Wire, 600 Vac, NEMA 1** | | | | |
| 30 | **DH261FGK** | TH2261DC | HF261 | H361 |
| 60 | **DH262FGK** | TH2262DC | HF262 | H362 |
| 100 | **DH263FGK** | TH2263DC | HF263 | H363 |
| 200 | **DH264FGK** | N/A | N/A | H364 |
| 400 | **DH265FGK** | N/A | HF265 | H265 |
| 600 | **DH266FGK** | N/A | HF266 | H266 |
| 800 | **DH267FGK** | N/A | N/A | H267 |
| 1200 | **N/A** | N/A | N/A | H268 |
| **Fusible, Three-Pole, Three-Wire, 600 Vac, NEMA 1** | | | | |
| 30 | **DH361FGK** | TH3361 | HF361 | H361 |
| 60 | **DH362FGK** | TH3362 | HF362 | H362 |
| 100 | **DH363FGK** | TH3363 | HF363 | H363 |
| 200 | **DH364FGK** | TH3364 | HF364 | H364 |
| 400 | **DH365FGK** | TH3365 | HF365 | H365 |
| 600 | **DH366FGK** | TH3366 | HF366 | H366 |
| 800 | **DH367FGK** | TC72367 | HF367 | H367 |
| 1200 | **DH368FGK** | TC72368 | HF368 | H368 |
| **Fusible, Three-Pole, Four-Wire, 600 Vac, NEMA 1** | | | | |
| 30 | **DH361NGK** | TH3361 ① | HF361N | H361N |
| 60 | **DH362NGK** | TH3362 ① | HF362N | H362N |
| 100 | **DH363NGK** | TH3363 ① | HF363N | H363N |
| 200 | **DH364NGK** | TH3364 ① | HF364N | H364N |
| 400 | **DH365NGK** | TH3365 ① | HF365N | H365N |
| 600 | **DH366NGK** | TH3366 ① | HF366N | H366N |
| 800 | **DH367NGK** | TC72367 ① | HF367N | H367N |
| 1200 | **DH368NGK** | TC72368 ① | HF368 ① | H368N |
| **Fusible, Four-Pole, Four-Wire, 600 Vac, NEMA 1** | | | | |
| 30 | **DH461FGK** | TH6661 | N/A | H461 |
| 60 | **DH462FGK** | TH6662 | N/A | H462 |
| 100 | **DH463FGK** | TH6663 | N/A | H463 |
| 200 | **DH464FGK** | TH6664 | N/A | H464 |
| 400 | **DH465FGK** | N/A | N/A | H465 |
| 600 | **DH466FGK** | N/A | N/A | H466 |
| **Non-Fusible, Two-Pole, Two-Wire, 600 Vac, NEMA 1** | | | | |
| 30 | **DH261UGK** | THN2261DC | HNF261 | HU361 |
| 60 | **DH262UGK** | THN2262DC | HNF262 | HU362 |
| 100 | **DH263UGK** | THN2263DC | HNF263 | HU363 |
| 200 | **DH264UGK** | N/A | N/A | HU364 |
| 400 | **DH265UGK** | N/A | HNF265 | HU265 |
| 600 | **DH266UGK** | N/A | HNF266 | HU266 |
| 800 | **DH267UGK** | N/A | N/A | HU267 |
| 1200 | **N/A** | N/A | N/A | HU268 |

## Heavy-Duty, continued

| Ampere Rating | Catalog Number Eaton | General Electric | Siemens | Square D |
|---|---|---|---|---|
| **Non-Fusible, Four-Pole, Four-Wire, 600 Vac, NEMA 1** | | | | |
| 30 | **DH461UGK** | THN6661 | N/A | HU461 |
| 60 | **DH462UGK** | THN6662 | N/A | HU462 |
| 100 | **DH463UGK** | THN6663 | N/A | HU463 |
| 200 | **DH464UGK** | THN6664 | N/A | HU464 |
| 400 | **DH465UGK** | N/A | N/A | HU465 |
| 600 | **DH466UGK** | N/A | N/A | HU466 |
| **Fusible, Two-Pole, Two-Wire, 600 Vac, NEMA 3R** | | | | |
| 30 | **DH261FRK** | TH2261RDC | HF261R | H361RB |
| 60 | **DH262FRK** | TH2262RDC | HF262R | H362RB |
| 100 | **DH263FRK** | TH2263RDC | HF263R | H363RB |
| 200 | **DH264FRK** | N/A | N/A | H364RB |
| 400 | **DH265FRK** | N/A | N/A | H265R |
| 600 | **DH266FRK** | N/A | HF265R | H266R |
| 800 | **DH267FRK** | N/A | HF266R | H267R |
| 1200 | **DH268FRK** | N/A | N/A | H268R |
| **Fusible, Three-Pole, Three-Wire, 600 Vac, NEMA 3R** | | | | |
| 30 | **DH361FRK** | TH3361R | HF361R | H361RB |
| 60 | **DH362FRK** | TH3362R | HF362R | H362RB |
| 100 | **DH363FRK** | TH3363R | HF363R | H363RB |
| 200 | **DH364FRK** | TH3364R | HF364R | H364RB |
| 400 | **DH365FRK** | TH3365R | HF365R | H365R |
| 600 | **DH366FRK** | TH3366R | HF366R | H366R |
| 800 | **DH367FRK** | TC72367R | HF367R | H367R |
| 1200 | **DH368FRK** | TC72368R | HF368R | H368R |
| **Fusible, Three-Pole, Four-Wire, 600 Vac, NEMA 3R** | | | | |
| 30 | **DH361NRK** | TH3361R ① | HF361NR | H361NRB |
| 60 | **DH362NRK** | TH3362R ① | HF362NR | H362NRB |
| 100 | **DH363NRK** | TH3363R ① | HF363NR | H363NRB |
| 200 | **DH364NRK** | TH3364R ① | HF364NR | H364NRB |
| 400 | **DH365NRK** | TH3365R ① | HF365NR | H365NR |
| 600 | **DH366NRK** | TH3366R ① | HF366NR | H366NR |
| 800 | **DH367NRK** | TC72367R ① | HF367NR | H367NR |
| 1200 | **DH368NRK** | TC72368R ① | HF368R | H368NR |
| **Non-Fusible, Three-Pole, Three-Wire, 600 Vac, NEMA 3R** | | | | |
| 30 | **DH361URK** | THN2261RDC | HNF261R | HU361RB |
| 60 | **DH362URK** | THN2262RDC | HNF262R | HU362RB |
| 100 | **DH363URK** | THN2263RDC | HNF263R | HU363RB |
| 200 | **DH364URK** | N/A | N/A | HU364RB |
| 400 | **DH365URK** | N/A | HNF265R | HU265R |
| 600 | **DH366URK** | N/A | HNF266R | HU266R |
| 800 | **DH367URK** | N/A | N/A | HU267R |
| 1200 | **DH368URK** | N/A | N/A | HU268R |

***Notes***

① Separate neutral kit required.

Always verify the number of poles and wires required since catalog numbers may appear in multiple tables.

## Heavy-Duty, continued

| Ampere Rating | Catalog Number Eaton | General Electric | Siemens | Square D |
|---|---|---|---|---|
| **Non-Fusible, Four-Pole, Four-Wire, 600 Vac, NEMA 3R** | | | | |
| 30 | **DH461UDK** | THN6661 | N/A | N/A |
| 60 | **DH462UDK** | THN6662 | N/A | N/A |
| 100 | **DH463UDK** | THN6663 | N/A | N/A |
| 200 | **DH464UDK** | THN6664 | N/A | N/A |
| **Fusible, Two-Pole, Two-Wire, 600 Vac, NEMA 4/4X Stainless Steel** | | | | |
| 30 | **DH261FWK** | TH2261SSDC | HF261S | H361DS |
| 60 | **DH262FWK** | TH2262SSDC | HF262S | H362DS |
| 100 | **DH263FWK** | TH2263SSDC | HF263S | H363DS |
| 200 | **DH264FWK** | N/A | N/A | H364DS |
| 400 | **DH265FWK** | N/A | HF265S | H265DS |
| 600 | **DH366FWK** | N/A | HF266S | H266DS |
| 800 | **DH367FWK** | N/A | N/A | N/A |
| **Fusible, Three-Pole, Three-Wire, 600 Vac, NEMA 4/4X Stainless Steel** | | | | |
| 30 | **DH361FWK** | TH3361SS | HF361S | H361DS |
| 60 | **DH362FWK** | TH3362SS | HF362S | H362DS |
| 100 | **DH363FWK** | TH3363SS | HF363S | H363DS |
| 200 | **DH364FWK** | TH3364SS | HF364S | H364DS |
| 400 | **DH365FWK** | TH3365SS | HF365S | H365DS |
| 600 | **DH366FWK** | TH3366SS | HF366S | H366DS |
| 800 | **DH367FWK** | N/A | HF367S | N/A |
| **Fusible, Three-Pole, Four-Wire, 600 Vac, NEMA 4/4X Stainless Steel** | | | | |
| 30 | **DH361NWK** | TH3361SS ① | HF361S ① | H361DS ① |
| 60 | **DH362NWK** | TH3362SS ① | HF362S ① | H362DS ① |
| 100 | **DH363NWK** | TH3363SS ① | HF363S ① | H363DS ① |
| 200 | **DH364NWK** | TH3364SS ① | HF364S ① | H364NDS |
| 400 | **DH365NWK** | TH3365SS ① | HF365S ① | H365NDS |
| 600 | **DH366NWK** | TH3366SS ① | HF366S ① | H366NDS |
| **Non-Fusible, Two-Pole, Two-Wire, 600 Vac, NEMA 4/4X Stainless Steel** | | | | |
| 30 | **DH261UWK** | THN2261SSDC | HNF261S | HU361DS |
| 60 | **DH262UWK** | THN2262SSDC | HNF262S | HU362DS |
| 100 | **DH263UWK** | THN2263SSDC | HNF263S | HU363DS |
| 200 | **DH264UWK** | N/A | N/A | HU364DS |
| 400 | **DH265UWK** | N/A | HNF265S | HU265DS |
| 600 | **DH266UWK** | N/A | HNF266S | HU266DS |
| 800 | **DH267UWK** | N/A | N/A | N/A |
| **Non-Fusible, Three-Pole, Three-Wire, 600 Vac, NEMA 4/4X Stainless Steel** | | | | |
| 30 | **DH361UWK** | THN3361SS | HNF361S | HU361DS |
| 60 | **DH362UWK** | THN3362SS | HNF362S | HU362DS |
| 100 | **DH363UWK** | THN3363SS | HNF363S | HU363DS |
| 200 | **DH364UWK** | THN3364SS | HNF364S | HU364DS |
| 400 | **DH365UWK** | THN3365SS | HNF365S | HU365DS |
| 600 | **DH366UWK** | THN3366SS | HNF366S | HU366DS |
| 800 | **DH367UWK** | N/A | HNF367S | N/A |

## Heavy-Duty, continued

| Ampere Rating | Catalog Number Eaton | General Electric | Siemens | Square D |
|---|---|---|---|---|
| **Non-Fusible, Four-Pole, Four-Wire, 600 Vac, NEMA 4/4X Stainless Steel** | | | | |
| 30 | **DH461UWK** | N/A | N/A | HU461DS |
| 60 | **N/A** | N/A | N/A | HU462DS |
| 100 | **N/A** | N/A | N/A | HU464DS |
| 200 | **N/A** | N/A | N/A | HU464DS |
| **Fusible, Two-Pole, Two-Wire, 600 Vac, NEMA 12/3R** | | | | |
| 30 | **DH261FDK** | TH2261JDC | HF261J | H361AWK |
| 60 | **DH262FDK** | TH2262JDC | HF262J | H362AWK |
| 100 | **DH263FDK** | TH2263JDC | HF263J | H363AWK |
| 200 | **DH264FDK** | N/A | N/A | H364AWK |
| 400 | **DH265FDK** | N/A | HF265J | H265AWK |
| 600 | **DH266FDK** | N/A | HF266J | H266AWK |
| 800 | **DH267FDK** | N/A | N/A | H267AWK |
| 1200 | **N/A** | N/A | N/A | H268AWK |
| **Fusible, Three-Pole, Three-Wire, 600 Vac, NEMA 12/3R** | | | | |
| 30 | **DH361FDK** | TH3361J | HF361J | H361AWK |
| 60 | **DH362FDK** | TH3362J | HF362J | H362AWK |
| 100 | **DH363FDK** | TH3363J | HF363J | H363AWK |
| 200 | **DH364FDK** | TH3364J | HF364J | H364AWK |
| 400 | **DH365FDK** | TH3365J | HF365J | H365AWK |
| 600 | **DH366FDK** | TH3366J | HF366J | H366AWK |
| 800 | **DH367FDK** | N/A | HF367J | H367AWK |
| 1200 | **N/A** | N/A | N/A | H368AWK |
| **Fusible, Three-Pole, Four-Wire, 600 Vac, NEMA 12/3R** | | | | |
| 30 | **DH361NDK** | THN3361J ① | HF361J ① | H361AWK ① |
| 60 | **DH362NDK** | THN3362J ① | HF362J ① | H362AWK ① |
| 100 | **DH363NDK** | THN3363J ① | HF363J ① | H363AWK ① |
| 200 | **DH364NDK** | THN3364J ① | HF364J ① | H364NAWK |
| 400 | **DH365NDK** | THN3365J ① | HF365J ① | H365NAWK |
| 600 | **DH366NDK** | THN3366J ① | HF366J ① | H366NAWK |
| 800 | **DH367NDK** | N/A | HF367J ① | H367NAWK |
| 1200 | **N/A** | N/A | N/A | H368NAWK |
| **Fusible, Four-Pole, Four-Wire, 600 Vac, NEMA 12/3R** | | | | |
| 30 | **N/A** | TH6661 | N/A | H461AWK |
| 60 | **N/A** | TH6662 | N/A | H462AWK |
| 100 | **DH463FDK** | TH6663 | N/A | H463AWK |
| 200 | **DH464FDK** | TH6664 | N/A | H464AWK |
| 400 | **N/A** | N/A | N/A | H465AWK |

***Notes***

① Separate neutral kit required.

Always verify the number of poles and wires required since catalog numbers may appear in multiple tables.

## Heavy-Duty, continued

| Ampere Rating | Catalog Number Eaton | General Electric | Siemens | Square D |
|---|---|---|---|---|
| **Non-Fusible, Two-Pole, Two-Wire, 600 Vac, NEMA 12/3R** | | | | |
| 30 | **DH261UDK** | THN2261JDC | HNF261J | HU361AWK |
| 60 | **DH262UDK** | THN2262JDC | HNF262J | HU362AWK |
| 100 | **DH263UDK** | THN2263JDC | HNF263J | HU363AWK |
| 200 | **DH264UDK** | N/A | N/A | HU364AWK |
| 400 | **DH265UDK** | N/A | HNF265J | HU265AWK |
| 600 | **DH266UDK** | N/A | HNF266J | HU266AWK |
| 800 | **DH267UDK** | N/A | N/A | HU267AWK |
| 1200 | **N/A** | N/A | N/A | HU268AWK |
| **Non-Fusible, Three-Pole, Three-Wire, 600 Vac, NEMA 12/3R** | | | | |
| 30 | **DH361UDK** | THN3361J | HNF361J | HU361AWK |
| 60 | **DH362UDK** | THN3362J | HNF362J | HU362AWK |
| 100 | **DH363UDK** | THN3363J | HNF363J | HU363AWK |
| 200 | **DH364UDK** | THN3364J | HNF364J | HU364AWK |
| 400 | **DH365UDK** | THN3365J | HNF365J | HU365AWK |
| 600 | **DH366UDK** | THN3366J | HNF366J | HU366AWK |
| 800 | **DH367UDK** | N/A | HNF367J | HU367AWK |
| 1200 | **N/A** | N/A | N/A | HU368AWK |
| **Non-Fusible, Four-Pole, Four-Wire, 600 Vac, NEMA 12/3R** | | | | |
| 30 | **DH461UDK** | THN6661 | N/A | HU461AWK |
| 60 | **DH462UDK** | THN6662 | N/A | HU462AWK |
| 100 | **DH463UDK** | THN6663 | N/A | HU463AWK |
| 200 | **DH464UDK** | THN6664 | N/A | HU464AWK |
| 400 | **N/A** | N/A | N/A | HU465AWK |

## Heavy-Duty Six-Pole

| Ampere Rating | Catalog Number Eaton | General Electric | Siemens | Square D |
|---|---|---|---|---|
| **Fusible, Six-Pole, Six-Wire, 600 Vac, NEMA 3R** | | | | |
| 30 | **DH661FDK** | TH6661 | F651H | N/A |
| 60 | **DH662FDK** | TH6662 | F652H | N/A |
| 100 | **DH663FDK** | TH6663 | F653H | N/A |
| 200 | **DH664FDK** | TH6664 | N/A | N/A |
| **Fusible, Six-Pole, Six-Wire, 600 Vac, NEMA 12/3R** | | | | |
| 30 | **DH661FDK** | TH6661 | F651H | N/A |
| 60 | **DH662FDK** | TH6662 | F652H | N/A |
| 100 | **DH663FDK** | TH6663 | F653H | H663AWK |
| 200 | **DH664FDK** | TH6664 | N/A | H664RWK |
| **Fusible, Six-Pole, Six-Wire, 600 Vac, NEMA 4X** | | | | |
| 30 | **N/A** | N/A | F651SS | N/A |
| 60 | **N/A** | N/A | F652SS | N/A |
| 100 | **N/A** | N/A | F653SS | H663DS |
| 200 | **N/A** | N/A | N/A | H664DS |
| **Non-Fusible, Six-Pole, Six-Wire, 600 Vac, NEMA 3R** | | | | |
| 30 | **DH661UDK** | THN6661 | NF651H | N/A |
| 60 | **DH662UDK** | THN6662 | NF652H | N/A |
| 100 | **DH663UDK** | THN6663 | NF653H | N/A |
| 200 | **DH664UDK** | THN6664 | N/A | N/A |
| **Non-Fusible, Six-Pole, Six-Wire, 600 Vac, NEMA 12/3R** | | | | |
| 30 | **DH661UDK** | THN6661 | NF651H | HU661AWK |
| 60 | **DH662UDK** | THN6662 | NF652H | HU662AWK |
| 100 | **DH663UDK** | THN6663 | NF653H | HU663AWK |
| 200 | **DH664UDK** | THN6664 | N/A | HU664RWK |
| **Non-Fusible, Six-Pole, Six-Wire, 600 Vac, NEMA 4X** | | | | |
| 30 | **DH661UWK** | N/A | NF651SS | HU661DS |
| 60 | **DH662UWK** | N/A | NF652SS | HU662DS |
| 100 | **DH663UWK** | N/A | NF653SS | HU663DS |
| 200 | **DH664UWK** | N/A | N/A | HU664DS |

***Note***

Always verify the number of poles and wires required since catalog numbers may appear in multiple tables.

## Double-Throw

| Ampere Rating | Catalog Number Eaton | General Electric | Siemens | Square D |
|---|---|---|---|---|
| **Fusible, Two-Pole, Two-Wire, 240 Vac, NEMA 1** | | | | |
| 30 | **DT321FGK** | TDT3321 | N/A | N/A |
| 60 | **DT322FGK** | TDT3322 | N/A | N/A |
| 100 | **DT323FGK** | TDT3323 | N/A | DT223 |
| 200 | **DT224FGK** | TDT3324 | DTF224 | DT224 |
| 400 | **DT325FGK** | TDT3325 | N/A | N/A |
| 600 | **DT326FGK** | TDT3326 | N/A | N/A |
| **Fusible, Three-Pole, Three-Wire, 240 Vac, NEMA 1** | | | | |
| 30 | **DT321FGK** | TDT3321 | DTF321 | DT321 |
| 60 | **DT322FGK** | TDT3322 | DTF322 | DT322 |
| 100 | **DT323FGK** | TDT3323 | DTF323 | DT323 |
| 200 | **DT324FGK** | TDT3324 | DTF324 | DT324 |
| 400 | **DT325FGK** | TDT3325 | DTF325 | N/A |
| 600 | **DT326FGK** | TDT3326 | DTF326 | N/A |
| **Non-Fusible, Two-Pole, Two-Wire, 240 Vac, NEMA 1** | | | | |
| 30 | **DT221UGK** | N/A | DTNF221 | 92251 |
| 60 | **DT222UGK** | N/A | DTNF222 | DTU222 |
| 100 | **DT223UGK** | N/A | DTNF223 | DTU223 |
| 200 | **DT224UGK** | N/A | DTNF224 | DTU224 |
| 400 | **DT225UGK** | N/A | DTNF225 | 92255 |
| 600 | **DT226UGK** | N/A | DTNF226 | N/A |
| 800 | **DT227UGK** | N/A | N/A | N/A |
| **Non-Fusible, Three-Pole, Three-Wire, 240 Vac, NEMA 1** | | | | |
| 30 | **DT321UGK** | TC35321 | DTNF321 | DTU321 |
| 60 | **DT322UGK** | TC35322 | DTNF322 | DTU322 |
| 100 | **DT323UGK** | TC35323 | DTNF323 | DTU323 |
| 200 | **DT324UGK** | TC35324 | DTNF324 | DTU324 |
| 400 | **DT325UGK** | TC35325 | DTNF325 | 92355 |
| 600 | **DT326UGK** | TC35326 | DTNF326 | 92356 |
| 800 | **DT327UGK** | N/A | DTNF327 | N/A |
| **Fusible, Three-Pole, Three-Wire, 600 Vac, NEMA 1** | | | | |
| 30 | **DT361FGK** | TDT3361 | DTF361 | DT361 |
| 60 | **DT362FGK** | TDT3362 | DTF362 | DT362 |
| 100 | **DT363FGK** | TDT3363 | DTF363 | DT363 |
| 200 | **DT364FGK** | TDT3364 | DTF364 | DT364 |
| 400 | **DT365FGK** | TDT3365 | DTF365 | N/A |
| 600 | **N/A** | N/A | N/A | N/A |
| **Non-Fusible, Two-Pole, Two-Wire, 600 Vac, NEMA 1** | | | | |
| 30 | **DT261UGK** | N/A | DTNF261 | N/A |
| 60 | **DT262UGK** | N/A | DTNF262 | 82342 |
| 100 | **DT263UGK** | N/A | DTNF263 | 82343 |
| 200 | **DT264UGK** | N/A | DTNF264 | 82344 |
| 400 | **DT265UGK** | N/A | DTNF265 | 92345 |
| 600 | **DT266UGK** | N/A | DTNF266 | 92346 |

## Double-Throw, continued

| Ampere Rating | Catalog Number Eaton | General Electric | Siemens | Square D |
|---|---|---|---|---|
| **Non-Fusible, Three-Pole, Three-Wire, 600 Vac, NEMA 1** | | | | |
| 30 | **DT361UGK** | TC35361 | DTNF361 | DTU361 |
| 60 | **DT362UGK** | TC35362 | DTNF362 | DTU362 |
| 100 | **DT363UGK** | TC35363 | DTNF363 | DTU363 |
| 200 | **DT364UGK** | TC35364 | DTNF364 | DTU364 |
| 400 | **DT365UGK** | TC35365 | DTNF365 | 92345 |
| 600 | **DT366UGK** | TC35366 | DTNF366 | 92346 |
| 800 | **DT367UGK** | N/A | DTNF367 | N/A |
| 1200 | **N/A** | N/A | N/A | N/A |
| **Non-Fusible, Four-Pole, Four-Wire, 600 Vac, NEMA 1** | | | | |
| 30 | **N/A** | N/A | N/A | N/A |
| 60 | **N/A** | N/A | N/A | DTU462 |
| 100 | **N/A** | N/A | N/A | DTU463 |
| 200 | **DT464UGK** | N/A | NF454DTK | DTU464 |
| 400 | **DT465UGK** | N/A | NF455DTK | 92445 |
| 600 | **DT466UGK** | N/A | NF456DTK | 92446 |
| 800 | **DT467UGK** | N/A | NF457DTK | N/A |
| **Fusible, Two-Pole, Two-Wire, 240 Vac, NEMA 3R** | | | | |
| 30 | **DT321FRK** | TDT3321R | N/A | N/A |
| 60 | **DT322FRK** | TDT3322R | N/A | N/A |
| 100 | **DT323FRK** | TDT3323R | N/A | DT223RB |
| 200 | **DT224FRK** | TDT3324R | DTF224R | DT224RB |
| **Fusible, Three-Pole, Three-Wire, 240 Vac, NEMA 3R** | | | | |
| 30 | **DT321FRK** | TDT3321R | DTF321R | DT321RB |
| 60 | **DT322FRK** | TDT3322R | DTF322R | DT322RB |
| 100 | **DT323FRK** | TDT3323R | DTF323R | DT323RB |
| 200 | **DT324FRK** | TDT3324R | DTF324R | DT324RB |
| 400 | **DT325FRK** | N/A | FR325DTK | N/A |
| 600 | **DT326FRK** | N/A | FR326DTK | N/A |
| **Non-Fusible, Two-Pole, Two-Wire, 240 Vac, NEMA 3R** | | | | |
| 30 | **N/A** | N/A | N/A | N/A |
| 60 | **N/A** | N/A | N/A | N/A |
| 100 | **DT223URK** | N/A | N/A | DTU223RB |
| 200 | **DT224URK** | N/A | DTNF224R | DTU224RB |
| 400 | **DT225URK** | N/A | DTNF225R | 92255R |
| **Non-Fusible, Three-Pole, Three-Wire, 240 Vac, NEMA 3R** | | | | |
| 30 | **N/A** | N/A | N/A | N/A |
| 60 | **N/A** | N/A | N/A | N/A |
| 100 | **DT323URK** | N/A | DTNF323R | DTU323RB |
| 200 | **DT324URK** | N/A | DTNF324R | DTU324RB |
| 400 | **DT325URK** | N/A | N/A | 92355R |
| 600 | **N/A** | N/A | N/A | 92356R |

***Note***

Always verify the number of poles and wires required since catalog numbers may appear in multiple tables.

## Double-Throw, continued

| Ampere Rating | Catalog Number Eaton | General Electric | Siemens | Square D |
|---|---|---|---|---|
| **Fusible, Three-Pole, Three-Wire, 600 Vac, NEMA 3R** | | | | |
| 30 | **N/A** | N/A | N/A | DT361RB |
| 60 | **N/A** | N/A | N/A | DT362RB |
| 100 | **DT363FRK** | N/A | DTF363R | DT363RB |
| 200 | **DT364FRK** | N/A | DTF364R | DT364RB |
| 400 | **DT365FRK** | N/A | FR355DTK | N/A |
| **Non-Fusible, Two-Pole, Two-Wire, 600 Vac, NEMA 3R** | | | | |
| 30 | **N/A** | N/A | N/A | N/A |
| 60 | **N/A** | N/A | N/A | 82342RB |
| 100 | **N/A** | N/A | N/A | 82343RB |
| 200 | **DT264URK** | N/A | DTNF264R | 82344RB |
| 400 | **DT265URK** | N/A | DTNF265R | 92345RB |
| 600 | **DT266URK** | N/A | NFR256DTK | 92346RB |
| **Non-Fusible, Three-Pole, Three-Wire, 600 Vac, NEMA 3R** | | | | |
| 30 | **DT361URK** | N/A | DTNF361R | DTU361RB |
| 60 | **DT362URK** | N/A | DTNF362R | DTU362RB |
| 100 | **DT363URK** | N/A | DTNF363R | DTU363RB |
| 200 | **DT364URK** | N/A | DTNF364R | DTU364RB |
| 400 | **DT365URK** | N/A | DTNF365R | 92345RB |
| 600 | **DT366URK** | N/A | DTNF366R | 92346RB |
| 800 | **DT367URK** | N/A | DTNF367R | N/A |
| **Non-Fusible, Four-Pole, Four-Wire, 600 Vac, NEMA 3R** | | | | |
| 30 | **DT461URK** | N/A | NFR451DTK | N/A |
| 60 | **DT462URK** | N/A | NFR452DTK | 92442RB |
| 100 | **DT463URK** | N/A | NFR453DTK | 92443RB |
| 200 | **DT464URK** | N/A | NFR454DTK | 92444RB |
| 400 | **DT465URK** | N/A | NFR455DTK | 92445R |
| 600 | **DT466URK** | N/A | NFR456DTK | 92446R |
| 800 | **DT467URK** | N/A | NFR457DTK | N/A |
| **Non-Fusible, Six-Pole, Six-Wire, 600 Vac, NEMA 3R** | | | | |
| 30 | **DT661URK** | N/A | NFR651DTK | N/A |
| 60 | **DT662URK** | N/A | NFR652DTK | N/A |
| 100 | **DT663URK** | N/A | NFR653DTK | N/A |
| **Non-Fusible, Two-Pole, Two-Wire, 240 Vac, NEMA 12/3R** ① | | | | |
| 30 | **DT361UDK** | N/A | DTNF361J | H92251 |
| 60 | **DT362UDK** | N/A | DTNF362J | H82252 |
| 100 | **DT363UDK** | N/A | DTNF363J | H82253 |
| 200 | **DT364UDK** | N/A | DTNF364J | H82254 |
| 400 | **DT365UDK** | N/A | NF355HDTK | H92255 |
| **Non-Fusible, Three-Pole, Three-Wire, 240 Vac, NEMA 12/3R** ① | | | | |
| 30 | **DT361UDK** | N/A | DTNF361J | H92351 |
| 60 | **DT362UDK** | N/A | DTNF362J | DTU362AWK |
| 100 | **DT363UDK** | N/A | DTNF363J | DTU363AWK |
| 200 | **DT364UDK** | N/A | DTNF364J | DTU364AWK |
| 400 | **DT365UDK** | N/A | NF355HDTK | H92355 |
| 600 | **N/A** | N/A | N/A | H92356 |
| **Non-Fusible, Four-Pole, Four-Wire, 240 Vac, NEMA 12/3R** | | | | |
| 30 | **N/A** | N/A | N/A | H92451 |
| 60 | **N/A** | N/A | N/A | DTU462AWK |
| 100 | **N/A** | N/A | N/A | DTU463AWK |
| 200 | **N/A** | N/A | N/A | DTU464AWK |
| 400 | **N/A** | N/A | N/A | H92455 |
| 600 | **N/A** | N/A | N/A | H92456 |

## Double-Throw, continued

| Ampere Rating | Catalog Number Eaton | General Electric | Siemens | Square D |
|---|---|---|---|---|
| **Non-Fusible, Two-Pole, Two-Wire, 600 Vac, NEMA 12/3R** | | | | |
| 30 | **DT361UDK** | N/A | DTNF361J | N/A |
| 60 | **DT362UDK** | N/A | DTNF362J | H82342 |
| 100 | **DT363UDK** | N/A | DTNF363J | H82343 |
| 200 | **DT364UDK** | N/A | DTNF364J | H82344 |
| 400 | **DT365UDK** | N/A | NF355HDTK | H92345 |
| 600 | **N/A** | N/A | N/A | H92346 |
| **Non-Fusible, Three-Pole, Three-Wire, 600 Vac, NEMA 12/3R** | | | | |
| 30 | **DT361UDK** | N/A | DTNF361J | N/A |
| 60 | **DT362UDK** | N/A | DTNF362J | DTU362AWK |
| 100 | **DT363UDK** | N/A | DTNF363J | DTU363AWK |
| 200 | **DT364UDK** | N/A | DTNF364J | DTU364AWK |
| 400 | **DT365UDK** | N/A | NF355HDTK | H92345 |
| 600 | **N/A** | N/A | N/A | H92346 |
| **Non-Fusible, Four-Pole, Four-Wire, 600 Vac, NEMA 12/3R** | | | | |
| 30 | **N/A** | N/A | N/A | N/A |
| 60 | **N/A** | N/A | N/A | DTU462AWK |
| 100 | **N/A** | N/A | N/A | DTU463AWK |
| 200 | **N/A** | N/A | N/A | DTU464AWK |
| 400 | **N/A** | N/A | N/A | H92445 |
| 600 | **N/A** | N/A | N/A | H92446 |
| **Non-Fusible, Two-Pole, Two-Wire, 600 Vac, NEMA 4X** | | | | |
| 30 | **DT361UWK** | N/A | DTNF361S | N/A |
| 60 | **DT362UWK** | N/A | DTNF362S | 82342DS |
| 100 | **DT363UWK** | N/A | DTNF363S | 82343DS |
| 200 | **DT364UWK** | N/A | DTNF364S | 82344DS |
| 400 | **DT365UWK** | N/A | NF355SSDTK | N/A |
| **Non-Fusible, Three-Pole, Three-Wire, 600 Vac, NEMA 4X** | | | | |
| 30 | **DT361UWK** | N/A | DTNF361S | N/A |
| 60 | **DT362UWK** | N/A | DTNF362S | DTU362DS |
| 100 | **DT363UWK** | N/A | DTNF363S | DTU363DS |
| 200 | **DT364UWK** | N/A | DTNF364S | DTU364DS |
| 400 | **DT365UWK** | N/A | NF355SSDTK | N/A |
| **Non-Fusible, Four-Pole, Four-Wire, 600 Vac, NEMA 4X** | | | | |
| 30 | **N/A** | N/A | N/A | N/A |
| 60 | **N/A** | N/A | N/A | DTU462DS |
| 100 | **N/A** | N/A | N/A | DTU463DS |
| 200 | **N/A** | N/A | N/A | DTU464DS |
| **Fusible, Three-Pole, Three-Wire, 600 Vac, NEMA 4X** | | | | |
| 30 | **DT361FWK** | N/A | F351SSDTK | N/A |
| 60 | **DT362FWK** | N/A | F352SSDTK | N/A |
| 100 | **DT363FWK** | N/A | F353SSDTK | N/A |
| 200 | **DT364FWK** | N/A | F354SSDTK | N/A |
| 400 | **DT365FWK** | N/A | F355SSDTK | N/A |

***Notes***

① Eaton and Siemens switches shown are 600 V switches.

Always verify the number of poles and wires required since catalog numbers may appear in multiple tables.

## Catalog Number Selection

### General-Duty

**DG 3 2 1 N G B**

**Switch Type**
**DG** = General-duty/cartridge fuse

**Poles/Blades**
**1** = Single-pole
**2** = Two-pole
**3** = Three-pole

**Voltage**
**2** = 240 Vac

**Ampere Rating**
**1** = 30 A
**2** = 60 A
**3** = 100 A
**4** = 200 A
**5** = 400 A
**6** = 600 A

**Protection**
**F** = Fusible without neutral
**U** = Non-fusible
**N** = Fusible with neutral

**NEMA Enclosure Ratings**
**G** = NEMA 1
**R** = NEMA 3R

**Series**
**B** = Design general-duty 30–100 A
**K** = Design for general duty 200 A and higher

### Heavy-Duty

**DH 3 6 4 U D K W**

**Switch Type**
**DH** = Heavy-duty
**DS** = Classified location with DS interior

**Poles/Blades**
**1** = Single-pole
**2** = Two-pole
**3** = Three-pole
**4** = Four-pole
**6** = Six-pole

**Voltage** ①
**2** = 240 Vac
**6** = 600 Vac

**Ampere Rating**
**1** = 30 A
**2** = 60 A
**3** = 100 A
**4** = 200 A
**5** = 400 A
**6** = 600 A
**7** = 800 A
**8** = 1200 A

**Protection**
**F** = Fusible without neutral
**U** = Non-fusible
**N** = Fusible with neutral

**NEMA Enclosure Ratings**
**G** = NEMA 1
**R** = NEMA 3R
**D** = NEMA 12/3R
**P** = NEMA 4 ②
**W** = NEMA 4X (corrosion-resistant (304 Grade stainless steel)
**C** = NEMA 4X non-metallic (for Type DH)
**X** = NEMA 7/9 (for Type DS)

**Series**
**K** = Design all heavy-duty

**Options** ③
**W** = Viewing window ④⑤
**V** = Enhanced visible blade
**X** = Stainless steel mechanism
**LW** = Lower viewing window ⑥
**GCL** = Mill duty rated

***Notes***

① For DC ratings, check individual switch ratings.
② Only available for 400 A and higher safety switches.
③ See Modifications-Flex Center for additional available options.
④ All window switches feature enhanced visible blade design as standard.
⑤ Only available in NEMA 12/3R and NEMA 4X enclosures.
⑥ Only available in 200 to 1200 A NEMA 12/3R and NEMA 4X enclosures.

**These tables are intended for use in breaking down existing catalog numbers. They are not intended for building new catalog numbers.**

A factory-installed ground lug is supplied on all safety switches.

1

## Double-Throw

**DT 3 6 5 N D K W**

**Switch Type**
**DT** = Double-throw

**Poles/Blades**
**2** = Two-pole
**3** = Three-pole
**4** = Four-pole
**6** = Six-pole

**Ampere Rating**
**1** = 30 A
**2** = 60 A
**3** = 100 A
**4** = 200 A
**5** = 400 A
**6** = 600 A
**7** = 800 A
**8** = 1200 A

**Voltage** ①
**2** = 240 Vac
**6** = 600 Vac

**Protection**
**F** = Fusible without neutral
**U** = Non-fusible
**N** = Fusible with neutral

**NEMA Enclosure Ratings**
**G** = NEMA 1
**R** = NEMA 3R
**D** = NEMA 12/3R
**P** = NEMA 4 ②
**W** = NEMA 4X (corrosion-resistant (304 Grade stainless steel)

**Series**
**K** = Design all heavy-duty
**H** = General-duty double-throw switch (compact design 30–100 A)

**Options** ③
**W** = Viewing window ④⑤
**V** = Enhanced visible blade
**X** = Stainless steel mechanism

***Notes***

① For DC ratings, check individual switch ratings.
② Only available for 400 A and higher safety switches.
③ See Modifications-Flex Center for additional available options.
④ All window switches feature enhanced visible blade design as standard.
⑤ Only available in NEMA 12/3R and NEMA 4X enclosures.

**These tables are intended for use in breaking down existing catalog numbers. They are not intended for building new catalog numbers.**

A factory-installed ground lug is supplied on all safety switches.

## Options and Accessories

### Safety Switches

DH030NK

| Description | Catalog Number |
|---|---|
| **Neutral Kits** ① | |
| 30 A DG | **DG030NB** |
| 60–100 A DG | **DG100NB** |
| 200 A DG, DH (NEMA 1, 3R enclosures) | **DG200NK** |
| 30–60 A DH | **DH030NK** |
| 100 A DH | **DH100NK** |
| 200 A DH (NEMA 4X, 12 enclosures) | **DH200NK** |
| 400 A DG, DH | **DS400NK** |
| 600 A DG, DH | **ECB600NK** |
| 400 A fusible DT, 800–1200 A DH | **ECB800NK** |
| 30–100 A DT | **DT100NK** |
| 200 A DT | **DT200NK** |
| 400 A non-fusible DT | **DT400NK** |
| 600 A non-fusible DT | **DT600NK** |
| 600 A fusible DT, 800 A DT | **DT800NK** |
| 1200 A DT | **DT1200NK** |

DS200GK

| Description | Catalog Number |
|---|---|
| **Ground Lug Kits** Factory-installed ground lug is supplied on all safety switches | |
| 30–100 A DG | **DG030GB** |
| 30–100 A DH, DT ② | **DS100GK** |
| 200 A DG, DH, DT | **DS200GK** |
| 400–600 A DG, 400–1200 A DH, 400–1200 A DT | **DS468GK** |

DT100BK

| Description | Catalog Number |
|---|---|
| **Switching Neutral Bonding Kits** ③ | |
| 30–100 A DT, 3P, 4P non-fusible | **DT100BK** |
| 200 A DT, 3P, 4P non-fusible | **DT200BK** |
| 400 A DT, 3P, 4P non-fusible | **DT400BK** |
| 600 A DT, 3P, 4P non-fusible | **DT600BK** |
| 800–1200 A DT, 3P, 4P non-fusible | **DT800BK** |

DS16CP

| Description | Catalog Number |
|---|---|
| **Control Pole Kit (For 2P, 3P Switches)** | |
| 400–600 A DG, 30–1200 A DH, 30–1200 A DT Multiple key options are included with the control pole kit. Standard keys provide late-make, early-break functionality. Flanged key provides same make, same break functionality. | **DS16CP** |

DS200EK1

| Description | Catalog Number |
|---|---|
| **Auxiliary Contact Kits** Auxiliary contact kits are not field installable on shunt trip safety switches | |
| All switches (except 30–100 A DG) 1NO/1NC | **DS200EK1** ④ |
| All switches (except 30–100 A DG) 2NO/2NC | **DS200EK2** ④ |
| NEMA 7/9 switches (30–100 A) 1NO/1NC | **178C265G05** |
| NEMA 7/9 switches (30–100 A) 2NO/2NC | **178C265G06** |

DS36CL

| Description | Catalog Number |
|---|---|
| **Copper Lug Kits** | |
| 30 A DH, DT ⑤ | **DS16CL** |
| 60 A DH, DT ⑤ | **DS26CL** |
| 100 A DH, DT ⑤ | **DS36CL** |
| 200 A DH ⑤ | **DS46CL** |
| 400 A DH (NEMA 4, 4X, 12 enclosures) ⑥ | **DS56CL** |
| 600–800 A DH (NEMA 4, 4X, 12 enclosures) ⑥ | **DS66CL** |

### Safety Switches, continued

DS56CK

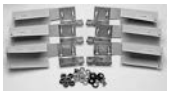

| Description | Catalog Number |
|---|---|
| **Crimp Lug Pad Kit (NEMA 4, 4X, 12 Enclosures Only)** | |
| 400–600 A DH ⑤ | **DS56CK** |
| 800 A DH ⑥ | **DS76CK** |
| 400–800 A neutral DH ③ | **DS800CNK** |

DS60FP

| Description | Catalog Number |
|---|---|
| **Fuse Puller Kits** | |
| 30 A DH ⑤ | **DS30FP** |
| 60 A DH ⑤ | **DS60FP** |
| 100 A DH ⑤ | **DS100FP** |
| 200 A DH ⑤ | **DS200FP** |

DS22JK

| Description | Catalog Number |
|---|---|
| **"J" Fuse Adapter Kits** ⑦⑧ | |
| 60 A 240 V DH ⑤ | **DS22JK** |
| 60 A DH, DT and receptacle switches ⑤ | **DS26JK** |
| 400 A 600 V DT ⑨ | **DT400JK** |
| 600 A 240–600 V DH, 600 A DG ⑥ | **DS600JK** |

DS12FK

| Description | Catalog Number |
|---|---|
| **"R" Fuse Adapter Kits** ⑤⑩ | |
| 30 A DG | **DG030RB** |
| 100 A DG | **DG100RB** |
| 30 A 240 V DH, DT | **DS12FK** |
| 30 A 600 V DH, DT, 60 A 240 V DH, DT, 60 A DG | **DS16FK** |
| 60 A 600 V DH, DT | **DS26FK** |
| 100 A 240–600 V DH, DT | **DS36FK** |
| 200 A 240–600 V DH, DT, 200 A DG | **DS46FK** |
| 400 A 240–600 V DH, 240 V DT, 400 A DG | **DS56FK** |
| 600 A 240–600 V DH, 600 A DG | **DS66FK** |

DS426TK

| Description | Catalog Number |
|---|---|
| **"T" Fuse Adapter Kits** | |
| 200 A 240 V DH ⑤ | **DS426TK** |
| 200 A 600 V DH ⑤ | **DS466TK** |
| 400 A 240 V DG, DH, DT ⑥ | **DS526TK** |
| 400 A 600 V DH ⑥ | **DS566TK** |
| 600 A 240 V DG, DH ⑥ | **DS626TK** |
| 600 A 600 V DH ⑥ | **DS666TK** |
| 600 A 240 V DT ⑥ | **DT626TK** |
| 600 A 600 V DT ⑥ | **DT666TK** |
| 800 A 240 V DH ⑥ | **DS726TK** |
| 800 A 600 V DH, DT ⑥ | **DS766TK** |
| **Miscellaneous Kits** | |
| Hookstick handle | **DH800HSH** |
| Lubricating grease for safety switch blades and contacts (each kit contains three 30 cc tubes of lubricating grease) | **DSLUBEKIT** |

***Notes***

① Service entrance bonding kit and sticker are included with the neutral kit.
② Ground bar kit is not listed on device publications.
③ Order one kit per switch.
④ For duty ratings, see table on following page.
⑤ Order one kit for three poles.
⑥ Order one kit for each pole.
⑦ 30 A Class J available as factory option only.
⑧ If Class J fuse kit is not listed, then switch will accept Class J fusing by repositioning either fuse base or fuse clips. No drilling required.
⑨ Order one kit for six poles.
⑩ Class R fuse kits are used to reject Class H fuses, and allow only Class R fuses to be installed.

Accessories are not applicable to NEMA 7/9 switches unless indicated otherwise.

1

### *Auxiliary Contact Rating*

#### AC Pilot Duty Ratings

| Catalog Number | Description | Volts | Break (Amperes) | Make (Amperes) |
|---|---|---|---|---|
| **DS200EK1** | 1NO/1NC | 110 | 15.0 | 40.0 |
| **DS200EK1** | 1NO/1NC | 220 | 10.0 | 20.0 |
| **DS200EK1** | 1NO/1NC | 440 | 6.0 | 10.0 |
| **DS200EK1** | 1NO/1NC | 600 | 5.0 | 8.0 |
| **DS200EK2** | 2NO/2NC | 110 | 3.0 | 30.0 |
| **DS200EK2** | 2NO/2NC | 220 | 1.5 | 15.0 |
| **DS200EK2** | 2NO/2NC | 440 | 1.0 | 8.0 |
| **DS200EK2** | 2NO/2NC | 600 | 0.8 | 6.0 |

#### DC Pilot Duty Ratings

| Catalog Number | Description | Volts | Single Throw (Amperes) | Double Throw (Amperes) |
|---|---|---|---|---|
| **DS200EK1** | 1NO/1NC | 115 | 2.0 | 0.5 |
| **DS200EK1** | 1NO/1NC | 230 | 0.5 | 0.2 |
| **DS200EK1** | 1NO/1NC | 600 | 0.1 | 0.02 |
| **DS200EK2** | 2NO/2NC | 115 | 1.0 | 0.2 |
| **DS200EK2** | 2NO/2NC | 230 | 0.3 | 0.1 |
| **DS200EK2** | 2NO/2NC | 600 | 0.1 | — |

Approximate Dimensions in Inches (mm)

**DS050MH**

### Myers Type Hubs

NEMA 3R (400 A and above)
NEMA 4, 4X (stainless steel), 12

| Catalog Number | Conduit Size |
|---|---|
| **DS050MH** | 0.50 (12.7) |
| **DS075MH** | 0.75 (19.1) |
| **DS100MH** | 1.00 (25.4) |
| **DS125MH** | 1.25 (31.8) |
| **DS150MH** | 1.50 (38.1) |
| **DS200MH** | 2.00 (50.8) |
| **DS250MH** | 2.50 (63.5) |
| **DS300MH** | 3.00 (76.2) |
| **DS350MH** | 3.50 (88.9) |
| **DS400MH** | 4.00 (101.6) |
| **DS500MH** | 5.00 (127.0) |

**DS075H1**

### Plate Type Hubs

For NEMA 3R enclosures (up to 200 A)

| Group 1 General-Duty, Heavy-Duty, Double-Throw Through 100 A | | Group 2 General-Duty, Heavy-Duty, Double-Throw—200 A | |
|---|---|---|---|
| **Catalog Number** | **Conduit Size** | **Catalog Number** | **Conduit Size** |
| **DS075H1** | 0.75 (19.1) | **DS200H2** | 2.00 (50.8) |
| **DS100H1** | 1.00 (25.4) | **DS250H2** | 2.50 (63.5) |
| **DS125H1** | 1.25 (31.8) | **DS300H2** | 3.00 (76.2) |
| **DS150H1** | 1.50 (38.1) | — | — |
| **DS200H1** | 2.00 (50.8) | — | — |

Catalog number **DS900AP** adapter kit permits installation of Group 1 hubs on 200 A type general-duty, heavy-duty and double-throw switches.

## Modifications—Flex Center

### *Introduction*

The Switching Device Flex Center is a special facility at the site of Eaton's Cleveland, Tennessee plant that is dedicated to providing customized safety switches and enclosed breakers that meet customer's challenging applications.

### Common Flex Center Design Offerings

| Modification | Catalog Suffix | Description |
|---|---|---|
| Custom paint | (varies) | Special paint colors are available such as red, orange, yellow, green, black, white. Other colors may be available upon request. Custom color is applied over the standard ANSI-61 gray finish. |
| Nameplates | -00NP | Plastic or phenolic nameplates are available. Up to three lines of text, 25 characters per line. Standard offering is white with black letters. Custom colors and sizes available upon request. Specify text at order entry. |
| Lock on provisions | -00LO | Available on heavy-duty and double-throw safety switches. Provision will accept a single lock. |
| Trapped key interlock | -00TK | Available on heavy-duty and double-throw safety switches. Trapped key systems are used on safety switches to prevent unauthorized operations or to predetermine a series of power transfers by an authorized operator. |
| Upper viewing window | W | An upper viewing window is centered over the switching contacts to provide visual verification of ON/OFF status. Available on NEMA 12/3R and NEMA 4X stainless steel heavy-duty and double-throw safety switches. **Note:** 30–100 A switches are now provided with a full view cover window for both blade and blown fuse viewing. |
| Lower viewing window | LW | A lower viewing window is centered over the fuses and provides visual verification of blown fuse indicators. Available on 200–1200 A NEMA 12/3R and NEMA 4X stainless steel heavy-duty and double-throw safety switches. Available for fusible switches only. **Note:** 30–100 A switches are now provided with a full view cover window for both blade and blown fuse viewing. |
| Neutral assemblies | N | Factory install of field neutral accessory kits. Add Suffix N on non-fusible switches, or replace the 6th character "F" with "N" on fusible switches. |
| Class "R" fuse clips | 5 or 6 | Factory installed Class R fuse clips/provisions. Add Suffix 5 for 240 V switches, and Suffix 6 for 600 V switches. Available on 30–600 A safety switches. |
| Class "T" fuse clips | T | Factory installed Class T fuse clips/provisions. Available on 200–1200 A safety switches. |
| Class "J" fuse clips | J | Factory installed Class J fuse clips/provisions. Available on 30–600 A safety switches. **Note:** Field modification kits are not available for 30 A heavy-duty safety switches. 30 A switches requiring Class J fusing must be ordered factory installed with J suffix. |
| Fungus proofing | -00FP | All non-metallic components of the switch are coated with a moisture and fungus-resistant varnish. The inhibitor used meets military specification: MIL-V-173C for MOISTURE AND FUNGUS-RESISTANT TREATMENT. The treated switch meets military specification MIL-T-152E for MOISTURE AND FUNGUS-RESISTANT TREATMENT OF COMMUNICATIONS, ELECTRONICS, AND ASSOCIATED EQUIPMENT. Not UL Listed. |
| Fuse pullers | FE | Factory installed fuse pullers. **Note:** Standard NEMA 12/3R and 4X switches 30–200 A are supplied with fuse pullers from the factory. |
| Crimp lug pads | -00CK | Factory installed crimp lug pad kits. Available on 400–800 A safety switches. Crimp lugs are not included. **Note:** Standard heavy-duty Type DH switches 30–200 A are adaptable to crimp lugs; simply remove the box lugs. |
| Copper lugs | -00CL | Factory installed copper lug kits. Available on 30–800 A safety switches. |
| Ground lug kits factory installed | G | Factory installed ground lug kits. Provides additional ground lug capacity when compared to ground lugs that come with standard safety switches. Available on 30–1200 A safety switches. |
| Custom lugs | -000L | Customer-specified lug arrangements are available on heavy-duty and double-throw safety switches. |
| Auxiliary contacts | 2 or 3 | Factory installed auxiliary contact kits (DS200EK1 or DS200EK2). Auxiliary contacts are Early-Make/Early-Break operation. To specify 1NO/1NC contact, add Suffix 2. To specify 2NO/2NC contacts, add Suffix 3. |
| Control pole | -00CP | The K-Series control pole provides one NO contact. It mounts in the exact location as the neutral block using the same pre-drilled holes. This is directly connected to the power pole operating shaft. Direct connection and visible blades provide more secure electrical interlocking than handle linkage operation of a snap/switch type interlock. This reliability meets the requirements of many specifications for four-pole switches when the fourth pole is required for secure electrical interlocking. This control pole provides Same-Make/Same-Break operation. |
| Control pole with offset | -0CP2 | Same as above except this control pole provides Late-Make/Early-Break operation. Both Control Pole options are provided when you purchase the DS16CP field kit. |
| Switching neutral double throws | SN | UL Listed for three-pole and four-pole non-fusible double-throw safety switches. Switching neutrals are required for separately derived systems when bonding the neutral of the generator to a grounding system at the generator. |
| Surge protection | (varies) | Factory installed Eaton Type 1 (SP1 series) or Type 2 (CVX series) surge protective device products. SPD installed and wired to load side of disconnect. |

### *Additional Flex Center Design Offerings*

- Left-hand design (30–200 A)
- Cover controls
- 200% neutrals
- Seam-welded stainless steel
- Quick Connect products with Cam-Lok™ and Posi-Lok™ receptacles
- Custom enclosures
- 316-Grade stainless steel
- Mill duty switches
- Irrigation switches
- Fuses installed
- Hook stick handles (heavy-duty switches only)
- Custom labels
- Custom mounting
- Pad-mount designs
- Non-standard receptacles
- Enhanced visible blade
- Voltage indicators

**Contact**

For more information on these or any other modifications, please contact the Switching Device Flex Center at 1-888-329-9272, email FlexSwitches@eaton.com or visit Eaton.com/FlexCenter.

1

## Technical Data and Specifications

### Standard Lug Capacities

| Description | Minimum Wire Size | Maximum Wire Size | Wire Type |
|---|---|---|---|
| 30 A DG | #14 | #6 | CU/AL |
| 30 A DH, DT | #14 | #2 | CU/AL |
| 60 A DG | #14 | #1/0 | CU/AL |
| 60 A DH, DT | #14 | #2 | CU/AL |
| 100 A DG ① | #14 | #1/0 | CU/AL |
| 100 A DH, DT | #14 | #1/0 | CU/AL |
| 200 A DG, DT | #6 | 250 kcmil | CU/AL |
| 200 A DH Type 1 and 3R | #6 | 250 kcmil | CU/AL |
| 200 A DH Type 4X and 12 | #6 | 300 kcmil | CU/AL |
| 400 A DG, DH, DT ② | (2) #1/0 | (2) 300 kcmil | CU/AL **or** ③ |
| | (1) #1/0 | (1) 750 kcmil | CU/AL |
| 600 A DG, DH | (1) #2 | (1) 600 kcmil | CU/AL **and** ④ |
| | (1) #1/0 | (1) 750 kcmil | CU/AL |
| 600 A non-fusible DT | (2) 250 | (2) 500 kcmil | CU/AL |
| 800 A DH | (4) #1/0 | (4) 750 kcmil | CU/AL |
| 600 A fusible DT, 800 A DT | (3) #250 | (3) 500 kcmil | CU/AL |
| 1200 A DH, DT | (4) #1/0 | (4) 750 kcmil | CU/AL |
| **Copper-Bodied Lugs** ⑤ | | | |
| 30 A CU | #14 | #6 | CU |
| 60 A CU | #14 | #4 | CU |
| 100 A CU | #6 | #1/0 | CU |
| 200 A CU | #6 | 250 kcmil | CU |
| 400 A CU Type 4, 4X, and 12 | #1/0 | 500 kcmil | CU |
| 600–800 A CU Type 4, 4X and 12 | (2) #1/0 | (2) 500 kcmil | CU |

***Notes***

① The maximum size aluminum or copper-clad wire allowable for applications where the conductor enters or leaves the enclosure through the wall opposite its terminal is #1 gauge.

② Applicable to DG/DH non-fused NEMA 1 and 3R only. The maximum size wire allowable for applications where the conductor enters or leaves the enclosure through the wall opposite its terminal is 250 kcmil.

③ Single barrel lug that accepts one or two cables per phase as detailed above.

④ Double barrel lug that accepts 2 cables per phase as detailed above.

⑤ No Copper-Bodied Lugs are available for 1200 A switches. No Copper-Bodied Lugs are available for larger than 500 kcmil cables. No Copper-Bodied Lugs are available for 400–800 A NEMA 1 or NEMA 3R switches.

Although certain lug capacities are larger than required, only minimum wire bending space is provided per the requirements noted in NEC®.

A factory-installed ground lug is supplied on all safety switches.

## Alternate Lug Capacities ①

| Description | Minimum Wire Size | Maximum Wire Size | Wire Type | Catalog Number Suffix | Line/Load ② |
|---|---|---|---|---|---|
| 30 A, 60 A, 100 A DH fusible | (3) #14 | (3) #2 | CU/AL | -00LA ③ | |
| 30 A, 60 A, 100 A DH | (3) #14 | (3) #2 | CU/AL | -LALN ③ | Line lugs only |
| 30 A, 60 A, 100 A DH fusible | (3) #14 | (3) #2 | CU/AL | -LALD ③ | Load lugs only |
| 30 A, 60 A, 100 A DH fusible | (2) #14 | (2) #2/0 | CU/AL | -00LB ③ | |
| 30 A, 60 A, 100 A DH | (2) #14 | (2) #2/0 | CU/AL | -LBLN ③ | Line lugs only |
| 30 A, 60 A, 100 A DH fusible | (2) #14 | (2) #2/0 | CU/AL | -LBLD ③ | Load lugs only |
| 30 A, 60 A DH | #14 | #1/0 | CU/AL | -LSE3 ③ | |
| 100 A DH Type 1 and 3R | #6 | 250 kcmil | CU/AL | -LSE4 ④ | |
| 100 A DH Type 4X and 12 | #6 | 300 kcmil | CU/AL | -LSE4 ④ | |
| 200 A DH | (2) #1/0 | (2) 300 kcmil | CU/AL **or** ⑤ | -LSE5 ⑥ | |
| | (1) #1/0 | (1) 750 kcmil | CU/AL | | |
| 400 A DH | (1) #2 | (1) 600 kcmil | CU/AL **and** ⑦ | -LSE6 ⑧ | |
| | (1) #1/0 | (1) 750 kcmil | CU/AL | | |
| 600 A DH | (4) #1/0 | (4) 750 kcmil | CU/AL | -LSE7 ⑨ | |

***Notes***

① Alternate Lugs are available as Factory Installed options only, through the Switching Device Flex Center. Field Kits are not available.
② The Alternate Lugs will be provided on both Line and Load side, unless otherwise noted.
③ Uses the 100 A switch enclosure and dimensions.
④ Uses the 200 A switch enclosure and dimensions.
⑤ Single barrel lug that accepts one or two cables per phase as specified in table.
⑥ Uses the 400 A switch enclosure and dimensions.
⑦ Double barrel lug that accepts two cables per phase as specified in table.
⑧ Uses the 600 A switch enclosure and dimensions.
⑨ Uses the 800 A switch enclosure and dimensions.

Although certain lug capacities are larger than required, only minimum wire bending space is provided per the requirements noted in NEC®.

A factory-installed ground lug is supplied in all heavy-duty safety switches.

## Standard Ground Lug Capacities

| Description | Minimum Wire Size | Maximum Wire Size | Wire Type |
|---|---|---|---|
| 30 A, 60 A, 100 A DG | #14 | #4 | CU/AL |
| 200 A DG | (2) #14 | (2) #2 | CU/AL |
| 400 A, 600 A DG | (2) #6 | (2) 250 kcmil | CU/AL |
| 30 A, 60 A, 100 A DH | #14 | #4 | CU/AL |
| 200 A DH Type 1 and 3R | (2) #14 | (2) #2 | CU/AL |
| 200 A DH Type 4X and 12 | #14 | #4 | CU/AL |
| 400 A, 600 A, 800 A, 1200 A DH | (2) #6 | (2) 250 kcmil | CU/AL |
| 30 A, 60 A, 100 A DT | (3) #14 | (3) #2 | CU/AL |
| 200 A DT | (3) #14 | (3) #2 | CU/AL |
| 400 A DT | (3) #6 | (3) 250 kcmil | CU/AL |
| 600 A, 800 A, 1200 A DT | (4) #6 | (4) 250 kcmil | CU/AL |

## Additional Grounding (Suffix G) Lug Capacities ①

| Description | Minimum Wire Size | Maximum Wire Size | Wire Type |
|---|---|---|---|
| 30 A, 60 A, 100 A DG | (7) #14 | (7) #4 | CU/AL |
| 200 A DG | (3) #14 | (3) #2 | CU/AL |
| 400 A, 600 A DG | (4) #6 | (4) 250 kcmil | CU/AL |
| 30 A, 60 A, 100 A DH | (7) #14 | (7) #4 | CU/AL |
| 200 A DH Type 1 and 3R | (3) #14 | (3) #2 | CU/AL |
| 200 A DH Type 4X and 12 | (2) #14 | (2) #2 | CU/AL |
| 400 A, 600 A, 800 A, 1200 A DH | (4) #6 | (4) 250 kcmil | CU/AL |
| 30 A, 60 A, 100 A DT | (7) #14 | (7) #4 | CU/AL |
| 200 A DT | (5) #14 | (5) #2 | CU/AL |
| 400 A DT | (6) #6 | (6) 250 kcmil | CU/AL |
| 600 A, 800 A, 1200 A DT | (6) #6 | (6) 250 kcmil | CU/AL |

## Ground Lug Kit Capacities

| Ground Lug Kit | Minimum Wire Size | Maximum Wire Size | Wire Type |
|---|---|---|---|
| DG030GB | #14 | #4 | CU/AL |
| DS100GK | (7) #14 | (7) #4 | CU/AL |
| DS200GK | (2) #14 | (2) #2 | CU/AL |
| DS468GK | (2) #6 | (2) 250 kcmil | CU/AL |

***Note***

① Additional Grounding is available as a Factory Modification, through the Switching Device Flex Center. Add Suffix G to the end of switch catalog number.

## Neutral Lug Kit Capacities

| Neutral Kit | Minimum Wire Size | Maximum Wire Size | Wire Type |
|---|---|---|---|
| DG030NB | (2) #14 | (2) #4 | CU/AL |
| DG100NB | (3) #14 | (3) #1/0 | CU/AL |
| DG200NK | (2) #6 | (2) 300 kcmil | CU/AL **and** |
| | (2) #14 | (2) #2 | |
| DH030NK | (4) #14 | (4) #2 | CU/AL |
| DH100NK | (2) #14 | (2) #2 | CU/AL **and** |
| | (2) #14 | (2) #1/0 | |
| DH200NK | (2) #14 | (2) #2 | CU/AL **and** |
| | (2) #6 | (2) 300 kcmil | |
| DS400NK | (2) #1/0 | (2) 750 kcmil | CU/AL **or** |
| | (4) #1/0 | (4) 300 kcmil | **and** |
| | (3) #6 | (3) 250 kcmil | |
| ECB600NK | (2) #1/0 | (2) 750 kcmil | CU/AL **and** |
| | (2) #2 | (2) 600 kcmil | |
| | (3) #6 | (3) 250 kcmil | |
| ECB800NK | (8) #1/0 | (8) 750 kcmil | CU/AL **and** |
| | (3) #6 | (3) 250 kcmil | |
| DT100NK | #14 | #2 | CU/AL **and** |
| | (3) #14 | (3) #1/0 | |
| DT200NK | #14 | #2 | CU/AL **and** |
| | (3) #6 | (3) 250 kcmil | |
| DT400NK | (7) #6 | (7) 250 kcmil | CU/AL |
| DT600NK | #6 | 250 kcmil | CU/AL **and** |
| | (6) 250 kcmil | (6) 500 kcmil | |
| ECB800NK | (3) #6 | (3) 250 kcmil | CU/AL **and** |
| | (8) #1/0 | (8) 750 kcmil | |
| DT800NK | (2) #6 | (2) 250 kcmil | CU/AL **and** |
| | (9) 250 kcmil | (9) 500 kcmil | |
| DT1200NK | (3) #6 | (3) 250 kcmil | CU/AL **and** |
| | (12) #1/0 | (12) 750 kcmil | |

### General-Duty

## Short-Circuit Ratings Using Class "R", "J" or "T" Fusing Where Applicable ①

| Ampere Rating | Short-Circuit Ratings (Amperes) Type 1 | Type 3R |
|---|---|---|
| 30 | 100 k at 240 V | 100 k at 240 V |
| 60 | 100 k at 240 V | 100 k at 240 V |
| 100 | 100 k at 240 V | 100 k at 240 V |
| 200 | 100 k at 240 V | 100 k at 240 V |
| 400 | 100 k at 250 V | 100 k at 250 V |
| 600 | 100 k at 250 V | 100 k at 250 V |

### Shunt Trip Safety Switch

## Short-Circuit Ratings Using Class "R," "J", "L" or "T" Fusing Where Applicable ②

| Ampere Rating | 480 V | 600 V |
|---|---|---|
| 30 | 200 kAIC | 200 kAIC |
| 60 | 200 kAIC | 200 kAIC |
| 100 | 200 kAIC | 200 kAIC |
| 200 | 200 kAIC | 100 kAIC |
| 400 | 200 kAIC | 100 kAIC |
| 600 | 200 kAIC | 100 kAIC |
| 800 | 200 kAIC | 200 kAIC |

### Heavy-Duty

## Short-Circuit Ratings Using Class "R," "J", "L" or "T" Fusing Where Applicable ①

| Ampere Rating | Short-Circuit Ratings (Amperes) Type 1 | Type 3R | Type 12/3R | Type 4 and 4X |
|---|---|---|---|---|
| 30 | 200 k at 600 V | 200 k at 600 V | 200 k at 600 V | 200 k at 600 V |
| 60 | 200 k at 600 V | 200 k at 600 V | 200 k at 600 V | 200 k at 600 V |
| 100 | 200 k at 480 V<br>100 k at 600 V | 200 k at 480 V<br>100 k at 600 V | 200 k at 600 V | 200 k at 600 V |
| 200 | 200 k at 600 V | 200 k at 600 V | 200 k at 600 V | 200 k at 600 V |
| 400 | 200 k at 480 V<br>100 k at 600 V | 200 k at 480 V<br>100 k at 600 V | 200 k at 480 V<br>100 k at 600 V | 200 k at 480 V<br>100 k at 600 V |
| 600 | 200 k at 480 V<br>100 k at 600 V | 200 k at 480 V<br>100 k at 600 V | 200 k at 480 V<br>100 k at 600 V | 200 k at 480 V<br>100 k at 600 V |
| 800 ③ | 200 k at 480 V<br>100 k at 600 V | 200 k at 480 V<br>100 k at 600 V | 200 k at 480 V<br>100 k at 600 V | 200 k at 480 V<br>100 k at 600 V |
| 1200 ③ | 200 k at 600 V | 200 k at 600 V | 200 k at 600 V | 200 k at 600 V |

### Double Throw

## Short-Circuit Ratings Using Class "R," "J," "L" or "T" Fusing where Applicable ③④⑤⑥⑦⑧⑨

| Ampere Rating | Short-Circuit Ratings (Amperes) (600 V) Type 1 | Type 3R | Type 12/3R | Type 4 and 4X |
|---|---|---|---|---|
| 30 | 100 k | 100 k | 100 k | 100 k |
| 60 | 100 k | 100 k | 100 k | 100 k |
| 100 | 100 k | 100 k | 100 k | 100 k |
| 200 | 100 k | 100 k | 100 k | 100 k |
| 400 | 100 k | 100 k | 100 k | 100 k |
| 600 | 100 k | 100 k | 100 k | 100 k |
| 800 | 100 k | 100 k | — | — |
| 1200 | 100 k | 100 k | — | — |

***Notes***

① Class "H" fuse clips supplied as standard for 30–600 A. Rated at 10,000 A rms symmetrical when using Class "H" fuses.

② Non-fusible values are based on combination rating with upstream device (see TD00801005E).

③ Class "L" fuse connectors supplied as standard for 800 A and 1200 A.

④ Class "H" fuse clips supplied as standard for 30–200 A and 400 A at 240 V. Rated at 10,000 A rms symmetrical when using Class "H" fuses.

⑤ Safety switch short-circuit ratings are applicable to AC only.

⑥ Safety switch $I^2t$ and Ip values are identical to UL maximum acceptable $I^2t$ and Ip values for the corresponding class fuse.

⑦ Table above is not applicable to the compact design shown on **Page V2-T1-49**. The compact design is suitable for use on a circuit capable of delivering not more than 10,000 rms symmetrical amperes.

⑧ Class T fuse clips supplied as standard for 400 A at 600 V.

⑨ Class J fuse clips supplied as standard for 600 A at 240 V and 600 V.

## Short-Circuit Ratings of Non-Fusible Switches

The UL listed short-circuit ratings for Eaton non-fusible switches are based on the switches being properly protected by overcurrent protective devices. For applications that require a UL listed short-circuit rating of 10,000 rms symmetrical amperes or less, an Eaton non-fusible switch must be properly protected by any overcurrent protective device rated no greater than the ampere rating of the switch.

For applications that require a UL listed short-circuit rating of greater than 10,000 rms symmetrical amperes, an Eaton non-fusible switch must be properly protected by the appropriate class and size fusing noted. Otherwise, this non-fusible switch must be replaced with an Eaton fusible switch that uses the appropriate fusing required.

Molded case circuit breaker protection of non-fusible Eaton switches for applications that require a short-circuit rating of greater than 10,000 rms symmetrical amperes has been evaluated and is summarized below. Refer to the reference tables for typical Eaton fusible switch UL listed short-circuit ratings.

### UL Recognized Safety Switch/Circuit Breaker Series-Connected Ratings

| Safety Switch Ampere Rating | Maximum System Voltage AC | Circuit Breaker Maximum Short-Circuit Rating (rms Symmetrical) | Circuit Breaker Frame(s) Series C/G | Power Defense |
|---|---|---|---|---|
| 30 and 60 | 600 | 25,000 | FDC, HFD, HFDE, EGH | PDG1xM, PDG2xM, PDG2xP |
| | | 18,000 | FD, EGE | PDG1xF, PDG2xG |
| | | 14,000 | FDB | PDG2xF |
| 100 | 600 | 25,000 | FDC, HFD, HFDE, EGH | PDG1xM, PDG2xM, PDG2xP |
| | | 18,000 | FD, EGE | PDG1xF, PDG2xG |
| | | 14,000 | FDB | PDG2xF |
| | 480 | 35,000 | EGH, EGS | PDG1xP, PDG1xM |
| 200 | 600 | 25,000 | FDC, HFD, HFDE, HJD, JGH | PDG2xM, PDG2xP |
| | | 18,000 | FD, JD, JGE | PDG2xG |
| | | 14,000 | FDB | PDG2xF |
| | 480 | 65,000 | HFD, HFDE, HJD, JGH | PDG2xM |

### *Product Enhancement*

Eaton non-fusible safety switches now carry series combination short-circuit ratings when paired with the identified MCCB or fuse type. With this listed rating, the safety switch shown in the one-line diagram, can be correctly applied **when the motor feeder Eaton HMCP circuit breaker is replaced with an Eaton molded case circuit breaker** properly sized for the motor hp rating. This is a significant enhancement to the product's performance rating. To achieve these ratings, the switches have been tested in combination with all of the overcurrent devices shown. Furthermore, the applicable combination ratings are marked on the inside of the switch door, ensuring inspector approval.

### One-Line Diagram

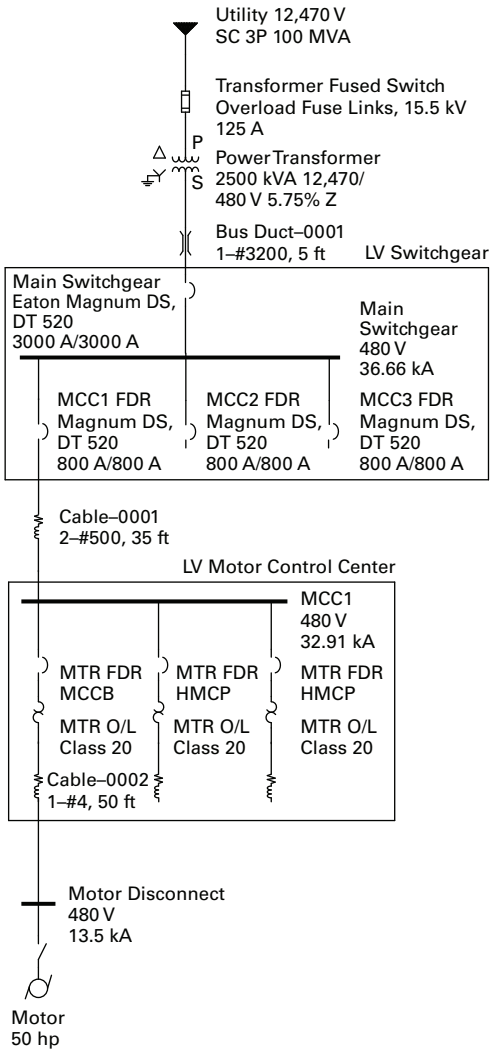

### *Information and Application*

The circuit breaker or fuse rating is not to exceed the ampere rating of the non-fusible switch. When used on systems with greater than 10 kA short-circuit rating available, the UL Listed short-circuit rating of the non-fusible switch is based upon the switch being used in combination with fuses or molded case circuit breakers identified in the table below.

## Non-Fusible Safety Switches

| Eaton Non-Fusible Safety Switch Ampere Rating ① | Maximum System Voltage AC | Maximum Short-Circuit Rating | Upstream Device ② Fuse Class | Breaker Frame Series C/G | Power Defense |
|---|---|---|---|---|---|
| 30 and 60 | 600 | 10,000 | H, K | Any circuit breaker | |
| | | 14,000 | | FDB | PDG2xF |
| | | 18,000 | | FD, EGE | PDG1xF, PDG2xG |
| | | 25,000 | | FDC, HFD, HFDE, EGH | PDG1xM, PDG2xM, PDG2xP |
| | | 200,000 | R, T, J, L | | |
| 100 | 480 | 10,000 | H, K | Any circuit breaker | |
| | | 35,000 | | EGH, EGS | PDG1xG, PDG1xM |
| | | 200,000 | R, T, J, L | | |
| | 600 | 10,000 | H, K | Any circuit breaker | |
| | | 14,000 | | FDB | PDG2xF |
| | | 18,000 | | FD, EGE | PDG1xF, PDG2xG |
| | | 25,000 | | FDC, HFD, HFDE, EGH | PDG1xM, PDG2xM, PDG2xP |
| | | 200,000 ③ | R, T, J, L | | |
| 200 | 480 | 10,000 | H, K | Any circuit breaker | |
| | | 65,000 | | HFD, HFDE, HJD, JGH | PDG2xM |
| | | 200,000 | R, T, J, L | | |
| | 600 | 10,000 | H, K | Any circuit breaker | |
| | | 14,000 | | FDB | PDG2xF |
| | | 18,000 | | FD, JD, JGE | PDG2xG |
| | | 25,000 | | FDC, HFD, HFDE, HJD, JGH | PDG2xM, PDG2xP |
| | | 200,000 | R, T, J, L | | |
| 400 | 480 | 200,000 | R, T, J | | |
| | 600 | 10,000 | H, K | Any circuit breaker | |
| | | 100,000 | R, T, J | | |
| 600 | 480 | 200,000 | R, T, J | | |
| | 600 | 10,000 | H, K | Any circuit breaker | |
| | | 100,000 | R, T, J | | |
| 800 | 480 | 200,000 | L, T | | |
| | 600 | 10,000 | | Any circuit breaker | |
| | | 100,000 | L, T | | |
| 1200 | 480 | 200,000 | L, T | | |
| | 600 | 10,000 | | Any circuit breaker | |
| | | 100,000 | L, T | | |

***Notes***

① For use on NEMA 1, 3R, 12/3R and 4X switches.
② Fuse or circuit breaker rating is not to exceed switch rating.
③ NEMA 12/3R, 4/4X only. NEMA 1, 3R are 100 kAIC at 600 Vac.

## Dimensions

### Typical Fuse Dimensions in Inches

**Note:** For typical fuse dimensions in millimeters, see **Page V2-T1-24**.

## Class T

**T-Tron™ Fuses**
JJN **(300 V)** JJS **(600 V)**

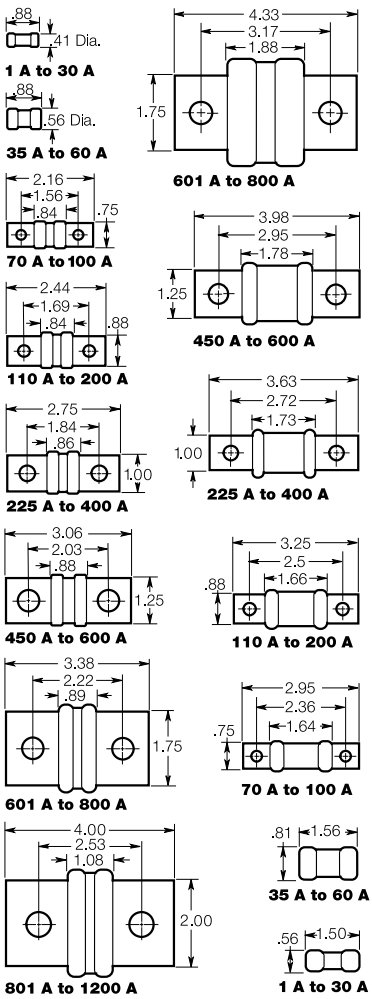


## Class J

**Low-Peak® and Limitron® Fuses**
LPJ & JKS **(600 V)**

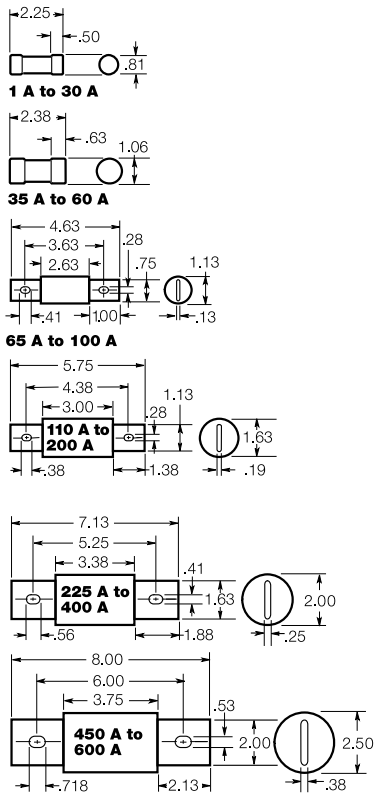


## Class RK5 and RK1, Class H

(Dimensions Apply)

**Fusetron®, Low-Peak and Limitron Fuses (250 and 600 V)**
FRN-R and FRS-R; LPN-RK and LPS-RK; KTN-R and KTS-R

Basic dimensions are same as Class H (formerly NEC) ONE-TIME (NON and NOS) and SUPERLAG Renewable RES and REN fuses.

**Note**: These fuses can be used to replace existing Class H, RK1 and RK5 fuses relating to dimensional compatibility.

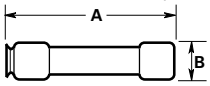


| | 250 V | | 600 V | |
|---|---|---|---|---|
| **Ampere** | **A** | **B** | **A** | **B** |
| 1/10–30 | 2.00 | 0.56 | 5.00 | 0.81 |
| 35–60 | 3.00 | 0.81 | 5.50 | 1.06 |

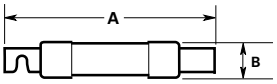


**Fusetron and Limitron**

| | 250 V | | 600 V | |
|---|---|---|---|---|
| **Ampere** | **A** | **B** | **A** | **B** |
| 70–100 | 5.88 | 1.06 | 7.88 | 1.34 |
| 110–200 | 7.13 | 1.56 | 9.63 | 1.84 |
| 225–400 | 8.63 | 2.06 | 11.63 | 2.59 |
| 450–600 | 10.38 | 2.59 | 13.38 | 3.13 |

**Low-Peak**

| | 250 V | | 600 V | |
|---|---|---|---|---|
| **Ampere** | **A** | **B** | **A** | **B** |
| 70–100 | 5.88 | 1.16 | 7.88 | 1.16 |
| 110–200 | 7.13 | 1.66 | 9.63 | 1.66 |
| 225–400 | 8.63 | 2.38 | 11.63 | 2.38 |
| 450–600 | 10.38 | 2.88 | 13.38 | 2.88 |

## Class L Low-Peak and Limitron Fuses

KRP-C, KTU & KLU (601–4000 A) **(600 V)**

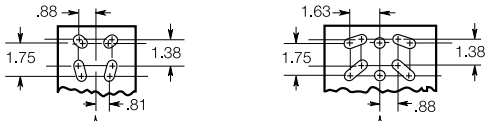


**Note**: KRP-CL (150–600 A) fuses have same dimensions as 601–800 A case size. KTU (200–600 A) have same dimensions, except tube 3-inch lgth. x 2-inch dia.; terminal 1.63-inch width x 1.25-inch thick.

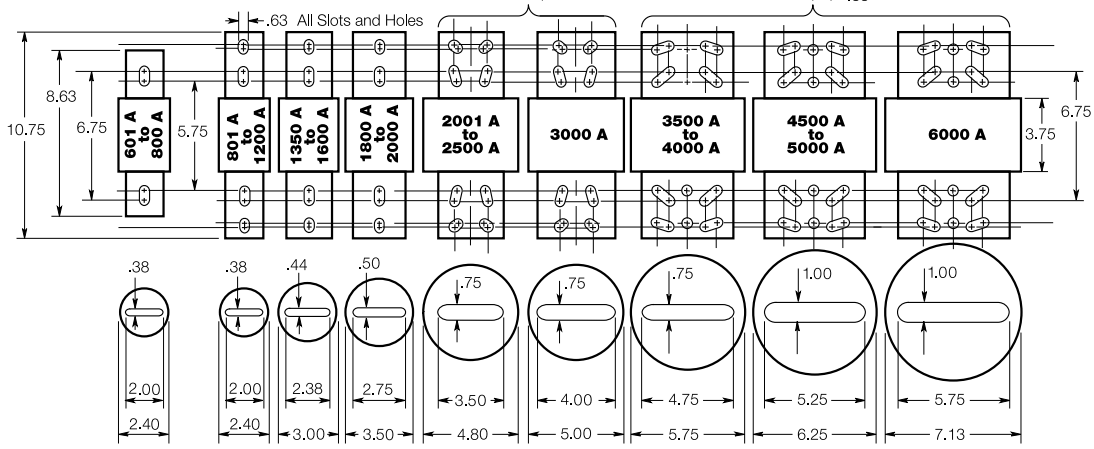

1

## Typical Fuse Dimensions in Millimeters

### Class T

**T-Tron Fuses**
JJN **(300 V)** JJS **(600 V)**

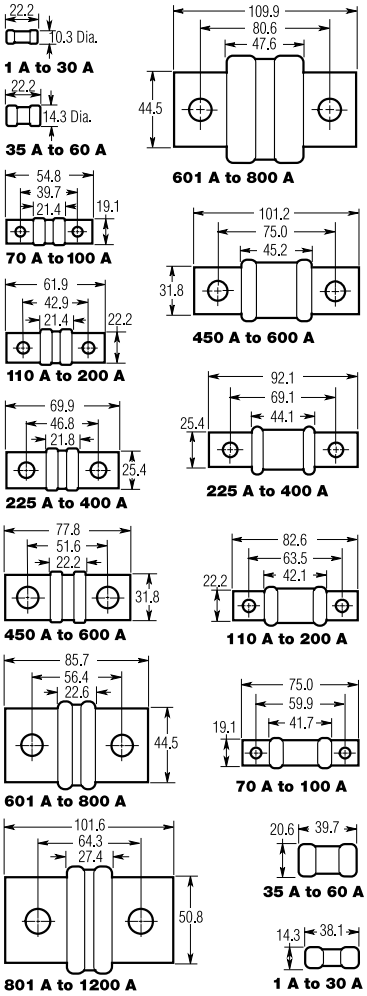


### Class J

**Low-Peak and Limitron Fuses**
LPJ and JKS **(600 V)**

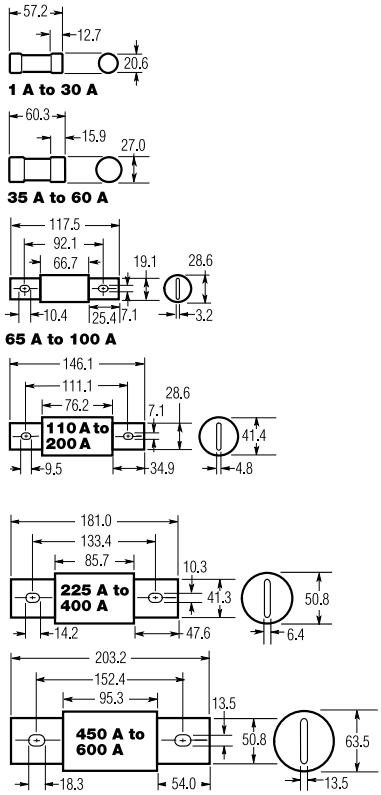


### Class RK5 and RK1, Class H

**Fusetron, Low-Peak and Limitron Fuses (250 and 600 V)**
FRN-R and FRS-R; LPN-RK and LPS-RK; KTN-R and KTS-R
Basic dimensions are same as Class H (formerly NEC) ONE-TIME (NON and NOS) and SUPERLAG Renewable RES and REN fuses.

**Note:** These fuses can be used to replace existing Class H, RK1 and RK5 fuses relating to dimensional compatibility.

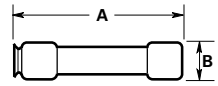


| | 250 V | | 600 V | |
|---|---|---|---|---|
| **Ampere** | **A** | **B** | **A** | **B** |
| 1/10–30 | 50.8 | 14.3 | 127.0 | 20.6 |
| 35–60 | 76.2 | 20.6 | 139.7 | 27.0 |

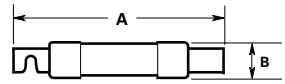


**Fusetron and Limitron**

| | 250 V | | 600 V | |
|---|---|---|---|---|
| **Ampere** | **A** | **B** | **A** | **B** |
| 70–100 | 149.2 | 26.9 | 200.0 | 34.0 |
| 110–200 | 181.0 | 39.6 | 244.5 | 46.7 |
| 225–400 | 219.1 | 52.3 | 295.3 | 65.8 |
| 450–600 | 263.5 | 65.8 | 339.7 | 79.5 |

**Low-Peak**

| | 250 V | | 600 V | |
|---|---|---|---|---|
| **Ampere** | **A** | **B** | **A** | **B** |
| 70–100 | 149.2 | 29.5 | 200.0 | 29.5 |
| 110–200 | 181.0 | 42.2 | 244.5 | 42.2 |
| 225–400 | 219.1 | 60.5 | 295.3 | 60.5 |
| 450–600 | 263.5 | 73.2 | 339.7 | 73.2 |

### Class L Low-Peak and Limitron Fuses

KRP-C, KTU and KLU (601–4000 A) **(600 V)**

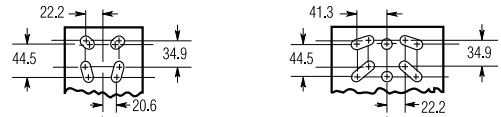


**Note**: KRP-CL (150–600 A) fuses have same dimensions as 601–800 A case size. KTU (200–600 A) have same dimensions, except tube 76.2 mm lgth. x 50.8 mm dia.; terminal 41.3 mm width x 31.8 mm thick.

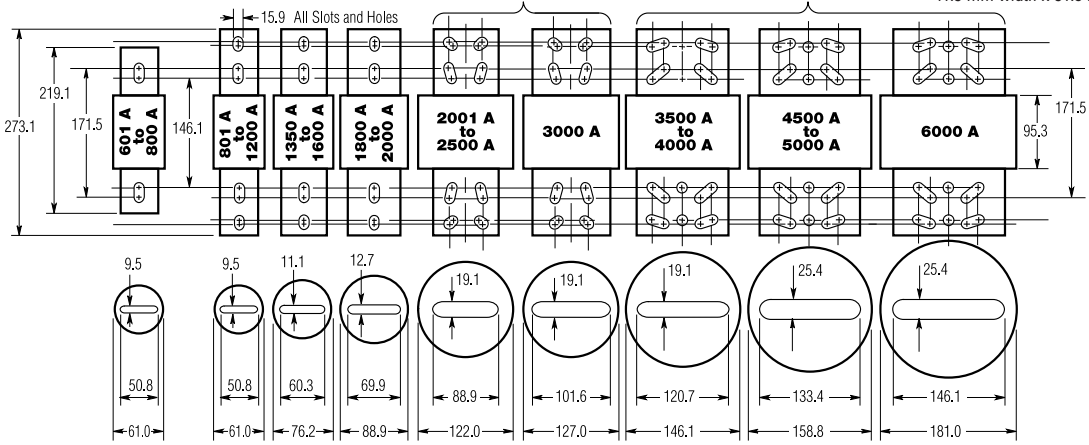

Cartridge Fuse General-Duty Safety Switch

## Contents


| *Description* | *Page* |
|---|---|
| Product Overview | **V2-T1-2** |
| General-Duty | **V2-T1-25** |
| Standards and Certifications | **V2-T1-26** |
| Product Selection | **V2-T1-27** |
| Dimensions | **V2-T1-29** |
| Heavy-Duty | **V2-T1-30** |
| Heavy-Duty Double-Door Safety Switch | **V2-T1-41** |
| Six-Pole Switches | **V2-T1-45** |
| Double-Throw Switches | **V2-T1-48** |
| EnviroLine Stainless Steel Switch | **V2-T1-55** |
| Window Switches | **V2-T1-59** |
| Receptacle Switches | **V2-T1-62** |
| Non-Metallic KRYDON Switch | **V2-T1-64** |
| Shunt Trip Safety Switch | **V2-T1-67** |
| NEMA 7/9—Hazardous Location Disconnect Switch | **V2-T1-70** |
| Quick-Connect Switches | **V2-T1-72** |
| DC Disconnect Switches | **V2-T1-77** |
| Mill-Duty Rated, Heavy-Duty Safety Switch | **V2-T1-86** |
| Elevator Control Switch | **V2-T1-88** |
| Auxiliary Power Heavy-Duty Safety Switch | **V2-T1-91** |
| Left-Handed Safety Switch | **V2-T1-95** |
| Heavy-Duty Surge Switch | **V2-T1-96** |
| EZ Isolator™ (OLI) Switch | **V2-T1-98** |
| Pringle Bolted Pressure Switch | **V2-T1-101** |
| Type DS, Fusible and Non-Fusible | **V2-T1-104** |
| Type Visi-Flex DE-ION | **V2-T1-107** |
| Flange Mounted—Variable Depth | **V2-T1-111** |
| Flange Mounted—Fixed Depth | **V2-T1-115** |


## General-Duty

### Product Description

- 30–600 A
- Suitable for service entrance applications unless otherwise noted
- Fusible and non-fusible switches are 100% load break and 100% load make rated
- The continuous load current of fusible switches is not to exceed 80% of the rating of fuses employed in other than motor circuits. Non-fusible switches are 100% fully rated
- 200–600 A features K-Series design
- Horsepower rated
- Fusible and non-fusible switches, single-pole S/N through four-wire; 120/240, and 240 Vac
- With Class R fuses, switches may be used on systems capable of delivering 100,000 A rms symmetrical
- Bolt-on hub provision. Provided for general-duty switches in a NEMA 3R enclosure. See **Page V2-T1-14** for selection

### Application Description

For residential and commercial applications. Suitable for light-duty motor circuits and service entrance.

### Features, Benefits and Functions

- Internal barrier included—compliant to NEC 230.62(C) and updated UL 98 requirements
- Ample wire bending space provides for easier installation
- Visible double-break quick-make, quick-break rotary blade mechanism
- Side opening door on all enclosures
- Mechanically interlocked cover to prevent easy access when the switch is in the ON position
- With Class R fuses, switches may be used on systems capable of delivering 100,000 A rms symmetrical
- Clearly visible and accessible neutral where applicable
- Visible ON/OFF indication
- Tangential knockouts on 30–60 A designs
- Ample wiring space
- Double padlocking capability on 30–100 A
- Triple padlocking capability on 200–600 A
- Additional door locking capability
- Bilingual English/Spanish door label on 30–100 A
- Tri-lingual nameplates

**All general-duty switches above 100 A and all heavy-duty switches incorporate these K-Series switch design features.**

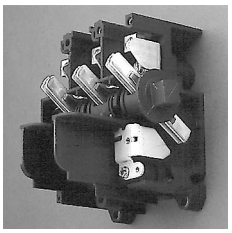

***Visible Double-Break Rotary Blade Mechanism***

- Two points of contact provide a positive open and close, easier operation, and also help prevent contact burning for longer contact life

***Clear Line Shield***

- Line side barrier protects against inadvertent contact with energized parts. Probe holes enable the user to test if the line side is energized without removing the shield
- Compliant with 2020 NEC 230.62(C) and the updated 2022 UL 98 construction requirement

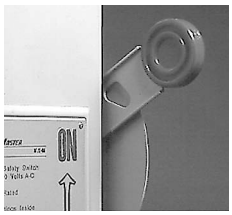


***Clearly Visible Handle***

- The position (ON or OFF) can be clearly seen from a distance and the length provides for easy operation

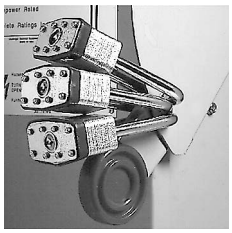

***Triple Padlocking Capability***

- Personnel safety feature because the large hasp can accommodate up to three 3/8-inch (9.5 mm) shank locks

***Additional Locking Capability***

- Cabinet door can be further padlocked at the top and bottom as applicable

***Interlocking Mechanism***

- Door cannot be opened when the handle is in the ON position. Front and side operable defeater mechanism provides for user access when necessary on single-throw switches

***Tangential Knockouts***

- An ample number are provided on the top, bottom and sides of both NEMA Types 1 and 3R enclosures through 200 A

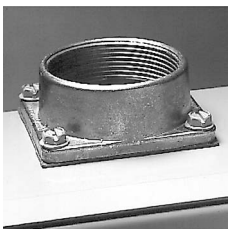

***Bolt-On Hub Kits***

- For switches in a NEMA Type 3R, 30–200 A. Use a Myers type hub for all others

**Standards and Certifications**

- UL listed File No. E5239
- Meets UL 98 for enclosed switches and NEMA Std. KS-1

Listed

***Seismic Qualifications***

- General-duty switches exceed the requirements of Uniform Building Code (UBC) and California Code Title 24 OSP-0011-10, OSP-0012-10

## Product Selection

### 120/240 Vac General-Duty, Fusible, Single-Throw

| System | Ampere Rating | Fuse Type Provision | Maximum Horsepower Ratings Single-Phase AC 120 V | Single-Phase AC 240 V | Three-Phase AC 240 V | DC 250 V | NEMA 1 Enclosure Indoor Catalog Number | NEMA 3R Enclosure Rainproof Catalog Number |
|---|---|---|---|---|---|---|---|---|
| **Cartridge Type—Two-Pole Two-Wire (Two Blades, Two Fuses)—240 Vac** | | | | | | | | |
| 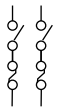 | 30 | — | — | 1-1/2–3 | 3–7-1/2 | — | ① | ① |
| | 60 | — | — | 3–10 | 7-1/2–15 | — | ① | ① |
| | 100 | — | — | 7-1/2–15 | 15–30 | — | ① | ① |
| | 200 | H or R | — | 15 | 25–60 | — | **DG224FGK** ②③ | **DG224FRK** ②③ |
| | 400 | H or R | — | — | 50–125 | — | **DG225FGK** ②③ | **DG225FRK** ②③ |
| | 600 | H or R | — | — | 75–200 | — | **DG226FGK** ②③ | **DG226FRK** ②③ |
| **Cartridge Type—Three-Wire (Two Blades, Two Fuses, S/N)—120/240 Vac** | | | | | | | | |
| 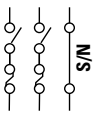  | 30 | H or R | — | 1-1/2–3 | 3–7-1/2 ④ | — | **DG221NGB** | **DG221NRB** |
| | 60 | H or R | — | 3–10 | 7-1/2–15 ④ | — | **DG222NGB** | **DG222NRB** |
| | 100 | H or R | — | 7-1/2–15 | 15–30 ④ | — | **DG223NGB** | **DG223NRB** |
| | 200 | H or R | — | 15 | 25–60 ④ | — | **DG224NGK** | **DG224NRK** |
| | 400 | H or R | — | — | 50–125 ④ | 50 | **DG225NGK** | **DG225NRK** |
| | 600 | H or R | — | — | 75–200 ④ | — | **DG226NGK** | **DG226NRK** |

***Notes***

① Use three-wire catalog numbers below.

② Solid neutral bars are not included. Order separately from table on **Page V2-T1-13**.

③ **WARNING!** Switch is not approved for service entrance unless a neutral kit is installed.

④ Grounded B phase rating, UL listed.

All general-duty safety switches are individually packaged.

Accessories are limited in scope on general-duty safety switches. See **Page V2-T1-13** for availability. In addition, clear line shields are available as an accessory on 200–600 A general-duty switches. Catalog Numbers: 200 A = 70-7759-11, 400 A = 70-8063-8, 600 A = 70-8064-8.

1

DG321NRB

## 120/240 Vac General-Duty, Fusible, Single-Throw, continued

| System | Ampere Rating | Fuse Type Provision | Maximum Horsepower Ratings ① Single-Phase AC 120 V | 240 V | Three-Phase AC 240 V | DC 250 V | NEMA 1 Enclosure Indoor Catalog Number | NEMA 3R Enclosure Rainproof Catalog Number |
|---|---|---|---|---|---|---|---|---|
| **Cartridge Type—Three-Pole, Three-Wire (Three Blades, Three Fuses)—240 Vac** | | | | | | | | |
| 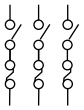 | 30 | — | — | — | — | — | ② | ② |
| | 60 | — | — | — | — | — | ② | ② |
| | 100 | — | — | — | — | — | ② | ② |
| | 200 | H or R | — | 15 | 25–60 | — | **DG324FGK** ③④ | ② |
| | 400 | H or R | — | — | 50–125 | — | **DG325FGK** ③④ | **DG325FRK** ③④ |
| | 600 | H or R | — | — | 75–200 | — | **DG326FGK** ③④ | **DG326FRK** ③④ |
| **Cartridge Type—Four-Wire (Three Blades, Three Fuses, S/N)—120/240 Vac** | | | | | | | | |
| 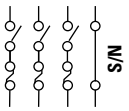  | 30 | H or R | — | 1-1/2–3 | 3–7-1/2 | — | **DG321NGB** | **DG321NRB** |
| | 60 | H or R | — | 3–10 | 7-1/2–15 | — | **DG322NGB** | **DG322NRB** |
| | 100 | H or R | — | 7-1/2–15 | 15–30 | — | **DG323NGB** | **DG323NRB** |
| | 200 | H or R | — | 15 | 25–60 | — | **DG324NGK** | **DG324NRK** |
| | 400 | H or R | — | — | 50–125 | — | **DG325NGK** | **DG325NRK** |
| | 600 | H or R | — | — | 75–200 | — | **DG326NGK** | **DG326NRK** |

DG322URB

## 120/240 Vac General-Duty, Non-Fusible, Single-Throw

| System | Ampere Rating | Maximum Horsepower Ratings Single-Phase AC 120 V | 240 V | Three-Phase AC 240 V | DC 250 V | NEMA 1 Enclosure Indoor Catalog Number | NEMA 3R Enclosure Rainproof Catalog Number |
|---|---|---|---|---|---|---|---|
| **Two-Pole, Two-Wire (Two Blades)—240 Vac** | | | | | | | |
| | 30 | 2 | 3 | — | — | **DG221UGB** ④ | **DG221URB** ④ |
| | 60 | 3 | 10 | — | — | **DG222UGB** ④ | **DG222URB** ④ |
| | 100 | — | 15 | — | — | **DG223UGB** ④ | **DG223URB** ④ |
| | 200 | — | 15 | — | — | ④⑤ | **DG224URK** ④ |
| **Three-Pole, Three-Wire (Three Blades)—240 Vac** | | | | | | | |
| | 30 | 2 | 3 | 7-1/2 | — | **DG321UGB** ④ | **DG321URB** ④ |
| | 60 | 3 | 10 | 15 | — | **DG322UGB** ④ | **DG322URB** ④ |
| | 100 | — | 15 | 30 | — | **DG323UGB** ④ | **DG323URB** ④ |
| | 200 | — | 15 | 60 | — | **DG324UGK** ④ | **DG324URK** ④ |
| | 400 | — | — | 125 | — | **DG325UGK** ④ | **DG325URK** ④ |
| | 600 | — | — | 200 | — | **DG326UGK** ④ | **DG326URK** ④ |

***Notes***

① Maximum hp ratings apply only when dual element time delay fuses are used.
② Use four-wire catalog numbers below.
③ Solid neutral bars are not included. Order separately from table on **Page V2-T1-13**.
④ **WARNING!** Switch is not approved for service entrance unless a neutral kit is installed.
⑤ Use three-wire catalog numbers below.

All general-duty safety switches are individually packaged.

Accessories are limited in scope on general-duty safety switches. See **Page V2-T1-13** for availability. In addition, clear line shields are available as an accessory on 200–600 A general-duty switches. Catalog Numbers: 200 A = 70-7759-11, 400 A = 70-8063-8, 600 A = 70-8064-8.

## Dimensions

Approximate Dimensions in Inches (mm)

### General-Duty, Non-Fusible, 240 V, Three-Pole, Single-Throw ①

| Ampere Rating | Width (W) | Height (H) | Depth (D) | Depth (D2) | Weight Lb (kg) |
|---|---|---|---|---|---|
| **NEMA 1** | | | | | |
| 30 | 6.38 (162.1) | 10.69 (271.5) | 6.88 (174.8) | 3.75 (95.2) | 6 (2.724) |
| 60 | 8.69 (220.7) | 14.19 (360.4) | 7.38 (187.5) | 4.21 (106.9) | 9 (4.086) |
| 100 | 9.13 (231.9) | 18.81 (477.8) | 7.38 (187.5) | 4.23 (107.4) | 12 (5.448) |
| 200 | 16.00 (406.4) | 24.75 (628.7) | 11.25 (285.8) | 6.14 (156.0) | 48 (21.792) |
| 400 | 23.00 (584.2) | 44.75 (1136.7) | 12.63 (320.8) | 7.27 (184.7) | 100 (45.4) |
| 600 | 24.00 (609.6) | 52.25 (1327.2) | 14.25 (362.0) | 8.95 (227.3) | 130 (59.02) |
| **NEMA 3R** | | | | | |
| 30 | 6.38 (162.1) | 10.81 (274.6) | 6.88 (174.8) | 3.75 (95.2) | 6 (2.724) |
| 60 | 8.69 (220.7) | 14.38 (365.3) | 7.38 (187.5) | 4.21 (106.9) | 9 (4.086) |
| 100 | 9.13 (231.9) | 19.25 (489.0) | 7.38 (187.5) | 4.23 (107.4) | 12 (5.448) |
| 200 | 16.00 (406.4) | 25.50 (647.7) | 11.25 (285.8) | 6.14 (156.0) | 55 (24.97) |
| 400 | 23.00 (584.2) | 45.19 (1147.8) | 12.63 (320.8) | 7.27 (184.7) | 105 (47.67) |
| 600 | 24.00 (609.6) | 52.70 (1338.6) | 14.25 (362.0) | 8.95 (227.3) | 135 (61.29) |

### General-Duty, Fusible, 240 V, Three-Pole Solid Neutral, Single-Throw ①

| Ampere Rating | Width (W) | Height (H) | Depth (D) | Depth (D2) | Weight Lb (kg) |
|---|---|---|---|---|---|
| **NEMA 1** | | | | | |
| 30 | 6.38 (162.1) | 10.69 (271.5) | 6.88 (174.8) | 3.75 (95.2) | 6 (2.724) |
| 60 | 8.69 (220.7) | 14.19 (360.4) | 7.38 (187.5) | 4.21 (106.9) | 10 (4.54) |
| 100 | 9.13 (231.9) | 18.81 (477.8) | 7.38 (187.5) | 4.23 (107.4) | 14 (6.356) |
| 200 | 16.00 (406.4) | 24.75 (628.7) | 11.25 (285.8) | 6.14 (156.0) | 48 (21.792) |
| 400 | 23.00 (584.2) | 44.75 (1136.7) | 12.63 (320.8) | 7.27 (184.7) | 110 (49.94) |
| 600 | 24.00 (609.6) | 52.25 (1327.2) | 14.25 (362.0) | 8.95 (227.3) | 145 (65.83) |
| **NEMA 3R** | | | | | |
| 30 | 6.38 (162.1) | 10.81 (274.6) | 6.88 (174.8) | 3.75 (95.2) | 6 (2.724) |
| 60 | 8.69 (220.7) | 14.38 (365.3) | 7.38 (187.5) | 4.21 (106.9) | 10 (4.54) |
| 100 | 9.13 (231.9) | 19.25 (489.0) | 7.38 (187.5) | 4.23 (107.4) | 14 (6.356) |
| 200 | 16.00 (406.4) | 25.50 (647.7) | 11.25 (285.8) | 6.14 (156.0) | 55 (24.97) |
| 400 | 23.00 (584.2) | 45.19 (1147.8) | 12.63 (320.8) | 7.27 (184.7) | 115 (52.21) |
| 600 | 24.00 (609.6) | 52.70 (1338.6) | 14.25 (362.0) | 8.95 (227.3) | 150 (68.1) |

### NEMA 1, 3R 30–100 A General-Duty Non-Fusible and Fusible Single-Throw ②

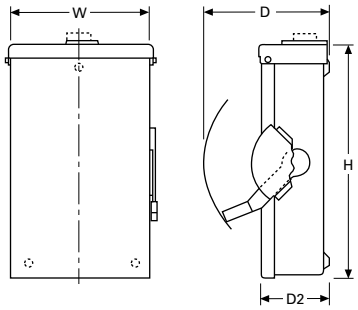


### NEMA 1, 3R 200–600 A General-Duty Non-Fusible and Fusible Single-Throw

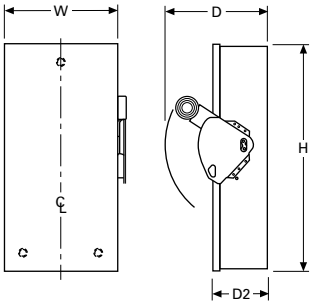


***Notes***

① Dimensions are for estimating purposes only.

② Figure is not applicable to plug fuse.

**Heavy-Duty Safety Switch**

## Contents


| *Description* | *Page* |
|---|---|
| Product Overview | **V2-T1-2** |
| General-Duty | **V2-T1-25** |
| Heavy-Duty | |
| Standards and Certifications | **V2-T1-30** |
| Product Selection | **V2-T1-32** |
| Dimensions | **V2-T1-38** |
| Heavy-Duty Double-Door Safety Switch | **V2-T1-41** |
| Six-Pole Switches | **V2-T1-45** |
| Double-Throw Switches | **V2-T1-48** |
| EnviroLine Stainless Steel Switch | **V2-T1-55** |
| Window Switches | **V2-T1-59** |
| Receptacle Switches | **V2-T1-62** |
| Non-Metallic KRYDON Switch | **V2-T1-64** |
| Shunt Trip Safety Switch | **V2-T1-67** |
| NEMA 7/9—Hazardous Location Disconnect Switch | **V2-T1-70** |
| Quick-Connect Switches | **V2-T1-72** |
| DC Disconnect Switches | **V2-T1-77** |
| Mill-Duty Rated, Heavy-Duty Safety Switch | **V2-T1-86** |
| Elevator Control Switch | **V2-T1-88** |
| Auxiliary Power Heavy-Duty Safety Switch | **V2-T1-91** |
| Left-Handed Safety Switch | **V2-T1-95** |
| Heavy-Duty Surge Switch | **V2-T1-96** |
| EZ Isolator™ (OLI) Switch | **V2-T1-98** |
| Pringle Bolted Pressure Switch | **V2-T1-101** |
| Type DS, Fusible and Non-Fusible | **V2-T1-104** |
| Type Visi-Flex DE-ION | **V2-T1-107** |
| Flange Mounted—Variable Depth | **V2-T1-111** |
| Flange Mounted—Fixed Depth | **V2-T1-115** |


## Heavy-Duty

### Product Description

- 30–1200 A
- 600 Vac, 600 Vdc maximum
- Horsepower rated
- Fusible and non-fusible switches are 100% load break and 100% load make rated
- The continuous load current of fusible switches is not to exceed 80% of the rating of fuses employed in other than motor circuits. Non-fusible switches are 100% fully rated
- Suitable for service entrance applications unless otherwise noted
- For factory modifications, refer to **Page V2-T1-15**

### Application Description

For heavy commercial and industrial applications where reliable performance and service continuity are critical.

For the toughest heavy commercial and industrial applications, refer to **Page V2-T1-86** for catalog information on our mill-duty safety switch.

316-Grade stainless steel is often a desirable choice for wastewater treatment plants and petrochemical facilities.

### Features, Benefits and Functions

- Internal barrier included—compliant to NEC 230.62(C) and updated UL 98 requirements
- Deionizing arc chutes; arc chutes confine and suppress the arcs produced by opening contacts under load
- Mechanically interlocked cover to prevent easy access when the switch is in the ON position
- Clearly visible palm fitting red handle
- Premium 316-Grade stainless steel enclosures offer better corrosion resistance in the presence of most chemicals, salts and acids, and is more resistant to marine atmospheres
- Visible double-break quick-make, quick-break blades
- Visible ON/OFF indication
- 30–1200 A NEMA 12 designs convertible to NEMA 3R by opening factory-installed drain hole
- Tri-lingual nameplates

### Standards and Certifications

- UL listed File No. E5239
- Meets UL 98 for enclosed switches and NEMA Std. KS-1

Listed

#### *Seismic Qualifications*

- Heavy-duty switches exceed the requirements of Uniform Building Code (UBC) and California Code Title 24 OSP-0011-10, OSP-0012-10

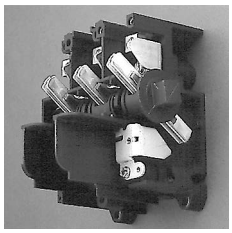

***Visible Double-Break Rotary Blade Mechanism***

- Two points of contact provide a positive open and close, easier operation, and also help prevent contact burning for longer contact life

***Clear Line Shield***

- Line side barrier protects against inadvertent contact with energized parts. Probe holes enable the user to test if the line side is energized without removing the shield
- Compliant with 2020 NEC 230.62(C) and the updated 2022 UL 98 construction requirements

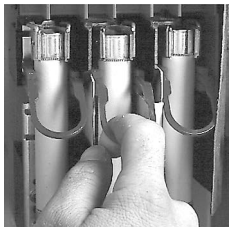

***Built-In Fuse Pullers (NEMA 12/3R and 4X 30–200 A Only)***

- Provide easy removal of fuses

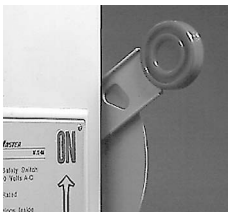


***Clearly Visible Handle***

- The position (ON or OFF) can be clearly seen from a distance and the length provides for easy operation

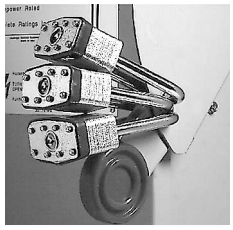

***Triple Padlocking Capability***

- Personnel safety feature because the large hasp can accommodate up to three 3/8-inch (9.5 mm) shank locks

***Additional Locking Capability***

- Cabinet door can be further padlocked at the top and bottom as applicable

***Interlocking Mechanism***

- Door cannot be opened when the handle is in the ON position. Front and side operable defeater mechanism provides for user access when necessary on single-throw switches

***Tangential Knockouts***

- An ample number are provided on the top, bottom and sides of both NEMA Types 1 and 3R enclosures through 200 A

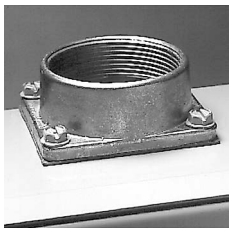

***Bolt-On Hub Kits***

- For switches in a NEMA Type 3R, 30–200 A. Use a Myers type hub for all others

1

## Product Selection

DH221NRK

### 240 Vac Heavy-Duty, Single-Throw, Fusible—NEMA 1, 3R, 12/3R

| System | Ampere Rating | Fuse Type Provision | Maximum Horsepower Ratings AC Standard Fuse Single-Phase | Three-Phase | Time Delay Single-Phase | Three-Phase | DC 250 V | NEMA 1 Enclosure Indoor Catalog Number | NEMA 3R Enclosure Rainproof Catalog Number | NEMA 12/3R Enclosure Industrial, Dust-Tight Catalog Number |
|---|---|---|---|---|---|---|---|---|---|---|
| **Two-Pole—240 Vac, 250 Vdc (Suitable for Service Entrance Use with a Neutral Kit Installed)** | | | | | | | | | | |
| 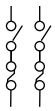 | 30 | H or R | 1-1/2 | — | — | — | 5 | **DH221FGK** ① | ③ | ③ |
| | 60 | — | — | — | — | — | — | ③ | ③ | ③ |
| | 100 | — | — | — | — | — | — | ③ | ③ | ③ |
| | 200 | — | — | — | — | — | — | ③ | ③ | ③ |
| | 400 | H or R | — | 50 ①② | — | 125 ①② | 50 | **DH225FGK** | **DH225FRK** | **DH225FDK** ⑤ |
| | 600 | H or R | — | 75 ①② | — | 200 ①② | — | **DH226FGK** | **DH226FRK** | **DH226FDK** ⑤ |
| | 800 | L | — | 100 ①② | — | — | — | **DH227FGK** | — | **DH227FDK** ⑤ |
| **Three-Wire (Two Blades, Two Fuses, S/N)—240 Vac, 250 Vdc** | | | | | | | | | | |
| 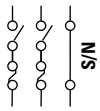 | 30 | H or R | 1-1/2 | 3 ④ | 3 | 7-1/2 ④ | 5 | **DH221NGK** ① | **DH221NRK** ① | **DH221NDK** ①⑤ |
| | 60 | H or R | 3 | 7-1/2 ④ | 10 | 15 ④ | 10 | **DH222NGK** | **DH222NRK** | **DH222NDK** ⑤ |
| | 100 | H or R | 7-1/2 | 15 ④ | 15 | 30 ④ | 20 | **DH223NGK** | **DH223NRK** | **DH223NDK** ⑤ |
| | 200 | H or R | 15 | 25 ④ | 15 | 60 ④ | 40 | **DH224NGK** | **DH224NRK** | **DH224NDK** ⑤ |
| | 400 | H or R | — | 50 ④ | — | 125 ④ | 50 | **DH225NGK** | **DH225NRK** | **DH225NDK** ⑤ |
| | 600 | H or R | — | 75 ④ | — | 200 ④ | — | **DH226NGK** | **DH226NRK** | **DH226NDK** ⑤ |
| | 800 | L | — | 100 ④ | — | — | — | **DH227NGK** | **DH227NRK** | **DH227NDK** ⑤ |
| **Three-Pole—240 Vac, 250 Vdc (Suitable for Service Entrance Use with a Neutral Kit Installed)** | | | | | | | | | | |
| 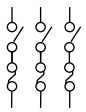 | 30 | H or R | 1-1/2 | 3 | 3 | 7-1/2 | 5 | **DH321FGK** ① | **DH321FRK** ① | **DH321FDK** ①⑤ |
| | 60 | H or R | 3 | 7-1/2 | 10 | 15 | 10 | **DH322FGK** | **DH322FRK** | **DH322FDK** ⑤ |
| | 100 | H or R | 7-1/2 | 15 | 15 | 30 | 20 | **DH323FGK** | **DH323FRK** | **DH323FDK** ⑤ |
| | 200 | H or R | 15 | 25 | 15 | 60 | 40 | **DH324FGK** | **DH324FRK** | **DH324FDK** ⑤ |
| | 400 | H or R | — | 50 | — | 125 | 50 | **DH325FGK** | **DH325FRK** | **DH325FDK** ⑤ |
| | 600 | H or R | — | 75 | — | 200 | — | **DH326FGK** | **DH326FRK** | **DH326FDK** ⑤ |
| | 800 | L | — | 100 | — | — | — | **DH327FGK** | **DH327FRK** | **DH327FDK** ⑤ |
| | 1200 | L | — | — | — | — | — | **DH328FGK** | **DH328FRK** | **DH328FDK** ⑤ |
| **Four-Wire (Three Blades, Three Fuses, S/N)—240 Vac, 250 Vdc** | | | | | | | | | | |
| 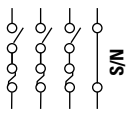 | 30 | H or R | 1-1/2 | 3 | 3 | 7-1/2 | 5 | **DH321NGK** ① | **DH321NRK** ① | **DH321NDK** ①⑤ |
| | 60 | H or R | 3 | 7-1/2 | 10 | 15 | 10 | **DH322NGK** | **DH322NRK** | **DH322NDK** ⑤ |
| | 100 | H or R | 7-1/2 | 15 | 15 | 30 | 20 | **DH323NGK** | **DH323NRK** | **DH323NDK** ⑤ |
| | 200 | H or R | 15 | 25 | 15 | 60 | 40 | **DH324NGK** | **DH324NRK** | **DH324NDK** ⑤ |
| | 400 | H or R | — | 50 | — | 125 | 50 | **DH325NGK** | **DH325NRK** | **DH325NDK** ⑤ |
| | 600 | H or R | — | 75 | — | 200 | — | **DH326NGK** | **DH326NRK** | **DH326NDK** ⑤ |
| | 800 | L | — | 100 | — | — | — | **DH327NGK** | **DH327NRK** | **DH327NDK** ⑤⑥ |
| | 1200 | L | — | — | — | — | — | **DH328NGK** | **DH328NRK** | **DH328NDK** ⑤ |
| **Four-Pole—240 Vac, 250 Vdc** | | | | | | | | | | |
| 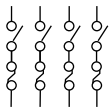 | 30 | H or R | 3 | 3 | 10 | 7-1/2 | 5 | **DH421FGK** ① | — | **DH421FDK** ①⑤ |
| | 60 | H or R | 7-1/2 | 7-1/2 | 20 | 15 | 10 | **DH422FGK** | — | **DH422FDK** ⑤ |
| | 100 | H or R | 15 | 15 | 30 | 30 | 20 | **DH423FGK** | — | **DH423FDK** ⑤ |
| | 200 | H or R | 30 | 25 | 50 | 60 | 40 | **DH424FGK** | — | **DH424FDK** ⑤ |
| | 400 | H or R | 50 | 50 | — | 125 | 50 | **DH425FGK** | ⑥ | ⑤⑥ |
| | 600 | H or R | — | 75 | — | 200 | — | **DH426FGK** | ⑥ | ⑤⑥ |

***Notes***

① 30 A heavy-duty switches with Type J fuse provisions are available from the factory only.
② Horsepower ratings apply only when neutral is field installed and switch is used on a grounded B phase system.
③ Use three-pole catalog numbers below.
④ Grounded B phase ratings, UL listed.
⑤ NEMA 12/3R enclosures (30–1200 A) can be field modified to meet NEMA 3R rainproof requirements when a factory-provided drain hole is opened.
⑥ Contact the Safety Switch Flex Center at FlexSwitches@eaton.com for availability of this product.

DH322FWK

## 240 Vac Heavy-Duty, Single-Throw, Fusible—NEMA 4, 4X, 4X 316 Stainless Steel

| System | Ampere Rating | Fuse Type Provision | Maximum Horsepower Ratings AC Standard Fuse Single-Phase | Standard Fuse Three-Phase | Time Delay Single-Phase | Time Delay Three-Phase | DC 250 V | NEMA 4 Enclosure Watertight, Painted Steel Catalog Number | NEMA 4X Enclosure Corrosion-Resistant, Stainless Steel Catalog Number | NEMA 4X Enclosure Corrosion-Resistant, 316-Grade Stainless Steel Catalog Number |
|---|---|---|---|---|---|---|---|---|---|---|
| **Two-Pole—240 Vac, 250 Vdc (Suitable for Service Entrance Use with a Neutral Kit Installed)** | | | | | | | | | | |
| 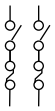 | 30 | H or R | 1-1/2 | — | — | — | 5 | — | ③ | ③ |
| | 60 | — | — | — | — | — | — | — | ③ or ④ | ③ or ④ |
| | 100 | — | — | — | — | — | — | — | ④ | ④ |
| | 200 | — | — | — | — | — | — | — | ④ | ④ |
| | 400 | H or R | — | 50 ① | — | 125 ① | 50 | **DH225FPK** | ④ | ④ |
| | 600 | H or R | — | 75 ① | — | 200 ① | — | **DH226FPK** | ④ | ④ |
| | 800 | L | — | 100 ① | — | — | — | — | ④ | ④ |
| **Three-Wire (Two Blades, Two Fuses, S/N)—240 Vac, 250 Vdc** | | | | | | | | | | |
| 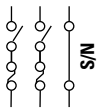 | 30 | H or R | 1-1/2 | 3 ② | 3 | 7-1/2 ② | 5 | — | **DH221NWK** ⑤ | **DH221NWK316** ⑤ |
| | 60 | H or R | 3 | 7-1/2 ② | 10 | 15 ② | 10 | — | **DH222NWK** | **DH222NWK316** |
| | 100 | H or R | 7-1/2 | 15 ② | 15 | 30 ② | 20 | — | **DH223NWK** | **DH223NWK316** |
| | 200 | H or R | 15 | 25 ② | 15 | 60 ② | 40 | — | **DH224NWK** | **DH224NWK316** |
| | 400 | H or R | — | 50 ② | — | 125 ② | 50 | **DH225NPK** | **DH225NWK** | **DH225NWK316** |
| | 600 | H or R | — | 75 ② | — | 200 ② | — | **DH226NPK** | **DH226NWK** | **DH226NWK316** |
| | 800 | L | — | 100 ② | — | — | — | **DH227NPK** | **DH227NWK** | **DH227NWK316** |
| **Three-Pole—240 Vac, 250 Vdc (Suitable for Service Entrance Use with a Neutral Kit Installed)** | | | | | | | | | | |
| 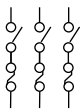 | 30 | H or R | 1-1/2 | 3 | 3 | 7-1/2 | 5 | — | **DH321FWK** ⑤ | **DH321FWK316** ⑤ |
| | 60 | H or R | 3 | 7-1/2 | 10 | 15 | 10 | — | **DH322FWK** | **DH322FWK316** |
| | 100 | H or R | 7-1/2 | 15 | 15 | 30 | 20 | — | **DH323FWK** | **DH323FWK316** |
| | 200 | H or R | 15 | 25 | 15 | 60 | 40 | — | **DH324FWK** | **DH324FWK316** |
| | 400 | H or R | — | 50 | — | 125 | 50 | **DH325FPK** | **DH325FWK** | **DH325FWK316** |
| | 600 | H or R | — | 75 | — | 200 | — | **DH326FPK** | **DH326FWK** | **DH326FWK316** |
| | 800 | L | — | 100 | — | — | — | **DH327FPK** | **DH327FWK** | **DH327FWK316** |
| | 1200 | L | — | — | — | — | — | — | **DH328FWK** | **DH328FWK316** |
| **Four-Wire (Three Blades, Three Fuses, S/N)—240 Vac, 250 Vdc** | | | | | | | | | | |
| 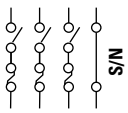 | 30 | H or R | 1-1/2 | 3 | 3 | 7-1/2 | 5 | — | **DH321NWK** ⑤ | **DH321NWK316** ⑤ |
| | 60 | H or R | 3 | 7-1/2 | 10 | 15 | 10 | — | **DH322NWK** | **DH322NWK316** |
| | 100 | H or R | 7-1/2 | 15 | 15 | 30 | 20 | — | **DH323NWK** | **DH323NWK316** |
| | 200 | H or R | 15 | 25 | 15 | 60 | 40 | — | **DH324NWK** | **DH324NWK316** |
| | 400 | H or R | — | 50 | — | 125 | 50 | **DH325NPK** | **DH325NWK** | **DH325NWK316** |
| | 600 | H or R | — | 75 | — | 200 | — | **DH326NPK** | **DH326NWK** | **DH326NWK316** |
| | 800 | L | — | 100 | — | — | — | — | ④ | ④ |
| | 1200 | L | — | — | — | — | — | — | **DH328NWK** | **DH328NWK316** |
| **Four-Pole—240 Vac, 250 Vdc** | | | | | | | | | | |
| 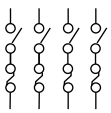 | 30 | H or R | 3 | 3 | 10 | 7-1/2 | 5 | — | ④ | ④ |
| | 60 | H or R | 7-1/2 | 7-1/2 | 20 | 15 | 10 | — | ④ | ④ |
| | 100 | H or R | 15 | 15 | 30 | 30 | 20 | — | ④ | ④ |
| | 200 | H or R | 30 | 25 | 50 | 60 | 40 | — | ④ | ④ |
| | 400 | H or R | 50 | 50 | — | 125 | 50 | — | ④ | ④ |
| | 600 | H or R | — | 75 | — | 200 | — | — | ④ | ④ |

***Notes***

① Horsepower ratings apply only when neutral is field installed and switch is used on a grounded B phase system.
② Grounded B phase ratings, UL listed.
③ Use three-pole catalog numbers below.
④ Contact the Safety Switch Flex Center at FlexSwitches@eaton.com for availability of this product.
⑤ 30 A heavy-duty switches with Type J fuse provisions are available from the factory only.

1

DH362NRK

## 600 Vac Heavy-Duty, Fusible, Single-Throw, 277/480–600 V—NEMA 1, 3R, 12/3R

| System | Ampere Rating | Fuse Class Provision | Maximum Horsepower Ratings with Time Delay Fuses: Single-Phase AC 480 V | Single-Phase AC 600 V | Three-Phase AC 480 V | Three-Phase AC 600 V | DC 250 V | DC 600 V | NEMA 1 Enclosure Indoor Catalog Number | NEMA 3R Enclosure Rainproof Catalog Number | NEMA 12/3R ① Enclosure Industrial, Dust-Tight Catalog Number |
|---|---|---|---|---|---|---|---|---|---|---|---|
| **Two-Pole—480 Vac—600 Vac or Vdc (Suitable for Service Entrance Use with a Neutral Kit Installed)** | | | | | | | | | | | |
| | 30 | H or R | 7-1/2 | 10 | — | — | — | 15 | **DH261FGK** ② | **DH261FRK** ② | **DH261FDK** ② |
| | 60 | H or R | 20 | 25 | — | — | — | 25 | **DH262FGK** | **DH262FRK** | **DH262FDK** |
| | 100 | H or R | 30 | 40 | — | — | 20 | 25 | **DH263FGK** | **DH263FRK** | **DH263FDK** |
| | 200 | H or R | 50 | 50 | — | — | 40 | 50 | **DH264FGK** | **DH264FRK** | **DH264FDK** |
| | 400 | H or R | — | — | — | — | 50 | — | **DH265FGK** | **DH265FRK** | **DH265FDK** |
| | 600 | H or R | — | — | — | — | 50 | — | **DH266FGK** | **DH266FRK** | **DH266FDK** |
| | 800 | L | — | — | — | — | — | — | **DH267FGK** | **DH267FRK** | **DH267FDK** |
| | 1200 | L | — | — | — | — | — | — | **DH268FGK** | **DH268FRK** | **DH267FDK** |
| **Three-Pole—480 Vac—600 Vac, 250 Vdc (Suitable for Service Entrance Use with a Neutral Kit Installed)** | | | | | | | | | | | |
| | 30 | H or R | 7-1/2 | 10 | 15 | 20 | — | — | **DH361FGK** ② | **DH361FRK** ② | **DH361FDK** ② |
| | 60 | H or R | 20 | 25 | 30 | 50 | — | — | **DH362FGK** | **DH362FRK** | **DH362FDK** |
| | 100 | H or R | 30 | 40 | 60 | 75 | — | — | **DH363FGK** | **DH363FRK** | **DH363FDK** |
| | 200 | H or R | 50 | 50 | 125 | 150 | — | — | **DH364FGK** | **DH364FRK** | **DH364FDK** |
| | 400 | H or R | — | — | 250 | 350 | — | — | **DH365FGK** | **DH365FRK** | **DH365FDK** |
| | 600 | H or R | — | — | 400 | 500 | — | — | **DH366FGK** | **DH366FRK** | **DH366FDK** |
| | 800 | L | — | — | 500 | 500 | — | — | **DH367FGK** | **DH367FRK** | **DH367FDK** |
| | 1200 | L | — | — | 500 | 500 | — | — | **DH368FGK** ⑤ | **DH368FRK** ⑤ | **DH368FDK** ⑤ |
| **Four-Wire (Three Blades, Three Fuses, S/N) 480 Vac—600 Vac, 250 Vdc** | | | | | | | | | | | |
| S/N | 30 | H or R | 7-1/2 | 10 | 15 | 20 | — | — | **DH361NGK** ② | **DH361NRK** ② | **DH361NDK** ② |
| | 60 | H or R | 20 | 25 | 30 | 50 | — | — | **DH362NGK** | **DH362NRK** | **DH362NDK** |
| | 100 | H or R | 30 | 40 | 60 | 75 | — | — | **DH363NGK** | **DH363NRK** | **DH363NDK** |
| | 200 | H or R | 50 | 50 | 125 | 150 | — | — | **DH364NGK** | **DH364NRK** | **DH364NDK** |
| | 400 | H or R | — | — | 250 | 350 | — | — | **DH365NGK** | **DH365NRK** | **DH365NDK** |
| | 600 | H or R | — | — | 400 | 500 | — | — | **DH366NGK** | **DH366NRK** | **DH366NDK** |
| | 800 | L | — | — | 500 | 500 | — | — | **DH367NGK** | **DH367NRK** | **DH367NDK** |
| | 1200 | L | — | — | 500 | 500 | — | — | **DH368NGK** ⑤ | **DH368NRK** ⑤ | **DH368NDK** ⑤ |
| **Four-Pole—480 Vac—600 Vac, 250 Vdc** | | | | | | | | | | | |
| | 30 | H or R | 20 ④ | 25 ④ | 15 | 20 | — | — | **DH461FGK** ② | ① | ③ |
| | 60 | H or R | 40 ④ | 50 ④ | 30 | 50 | — | — | **DH462FGK** | ① | ③ |
| | 100 | H or R | 50 ④ | 50 ④ | 60 | 75 | — | — | **DH463FGK** | ① | **DH463FDK** |
| | 200 | H or R | — | — | 125 | 150 | 40 | — | **DH464FGK** | ① | **DH464FDK** |
| | 400 | H or R | — | — | 250 | 350 | 50 | — | **DH465FGK** | ①③ | ③ |
| | 600 | H or R | — | — | 400 | 500 | — | — | **DH466FGK** | ①③ | ③ |
| | 800 | L | — | — | — | — | — | — | ② | ①③ | ③ |

***Notes***

① NEMA 12/3R enclosures (30–1200 A) can be field modified to meet NEMA 3R rainproof requirements when a factory-provided drain hole is opened.
② 30 A heavy-duty switches with Type J fuse provisions are available from the factory only.
③ Contact the Safety Switch Flex Center at FlexSwitches@eaton.com for availability of this product.
④ Ratings are for two-phase AC.
⑤ 1200 A/480 V service entrance must include ground fault protection to meet NEC 230.95; see Shunt Trip Safety Switches on **page V2-T1-67**.

## 600 Vac Heavy-Duty, Fusible, Single-Throw, 277/480–600 V—NEMA 4, 4X, 4X 316 Stainless Steel

| System | Ampere Rating | Fuse Class Provision | Maximum Horsepower Ratings with Time Delay Fuses: Single-Phase AC 480 V | Single-Phase AC 600 V | Three-Phase AC 480 V | Three-Phase AC 600 V | DC 250 V | DC 600 V | NEMA 4 Enclosure Watertight, Painted Steel Catalog Number | NEMA 4X Enclosure Corrosion-Resistant, Stainless Steel Catalog Number | NEMA 4X Enclosure Corrosion-Resistant, 316-Grade Stainless Steel Catalog Number |
|---|---|---|---|---|---|---|---|---|---|---|---|
| **Two-Pole—480 Vac—600 Vac or Vdc ① (Suitable for Service Entrance Use with a Neutral Kit Installed)** | | | | | | | | | | | |
| 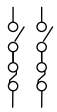 | 30 | H or R | 7-1/2 | 10 | — | — | — | 15 | — | **DH261FWK** ② | **DH261FWK316** ② |
| | 60 | H or R | 20 | 25 | — | — | — | 25 | — | ③ or ④ | ③ or ④ |
| | 100 | H or R | 30 | 40 | — | — | 20 | — | — | ③ or ④ | ③ or ④ |
| | 200 | H or R | 50 | 50 | — | — | — | 50 | — | **DH264FWK** | **DH264FWK316** |
| | 400 | H or R | — | — | — | — | 50 | — | ④ | ③ or ④ | ③ or ④ |
| | 600 | H or R | — | — | — | — | — | — | ④ | ③ or ④ | ③ or ④ |
| | 800 | L | — | — | — | — | — | — | ④ | ③ or ④ | ③ or ④ |
| | 1200 | L | — | — | — | — | — | — | — | ④ | ③ |
| **Three-Pole—480 Vac—600 Vac, 250 Vdc (Suitable for Service Entrance Use with a Neutral Kit Installed)** | | | | | | | | | | | |
| 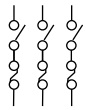 | 30 | H or R | 7-1/2 | 10 | 15 | 20 | — | — | — | **DH361FWK** ② | **DH361FWK316** ② |
| | 60 | H or R | 20 | 25 | 30 | 50 | — | — | — | **DH362FWK** | **DH362FWK316** |
| | 100 | H or R | 30 | 40 | 60 | 75 | — | — | — | **DH363FWK** | **DH363FWK316** |
| | 200 | H or R | 50 | 50 | 125 | 150 | — | — | — | **DH364FWK** | **DH364FWK316** |
| | 400 | H or R | — | — | 250 | 350 | — | — | **DH365FPK** | **DH365FWK** | **DH365FWK316** |
| | 600 | H or R | — | — | 400 | 500 | — | — | **DH366FPK** | **DH366FWK** | **DH366FWK316** |
| | 800 | L | — | — | 500 | 500 | — | — | **DH367FPK** | **DH367FWK** | **DH367FWK316** |
| | 1200 | L | — | — | 500 | 500 | — | — | — | **DH368FWK** ⑤ | **DH368FWK316** ⑤ |
| **Four-Wire (Three Blades, Three Fuses, S/N) 480 Vac—600 Vac, 250 Vdc** | | | | | | | | | | | |
| 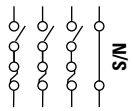  | 30 | H or R | 7-1/2 | 10 | 15 | 20 | — | — | — | **DH361NWK** ② | **DH361NWK316** ② |
| | 60 | H or R | 20 | 25 | 30 | 50 | — | — | — | **DH362NWK** | **DH362NWK316** |
| | 100 | H or R | 30 | 40 | 60 | 75 | — | — | — | **DH363NWK** | **DH363NWK316** |
| | 200 | H or R | 50 | 50 | 125 | 150 | — | — | — | **DH364NWK** | **DH364NWK316** |
| | 400 | H or R | — | — | 250 | 350 | — | — | **DH365NPK** | **DH365NWK** | **DH365NWK316** |
| | 600 | H or R | — | — | 400 | 500 | — | — | **DH366NPK** | **DH366NWK** | **DH366NWK316** |
| | 800 | L | — | — | 500 | 500 | — | — | — | **DH367NWK** | **DH367NWK316** |
| | 1200 | L | — | — | 500 | 500 | — | — | — | **DH368NWK** ⑤ | **DH368NWK316** ⑤ |
| **Four-Pole—480 Vac—600 Vac, 250 Vdc** | | | | | | | | | | | |
| 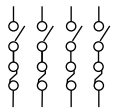 | 30 | H or R | 20 ⑥ | 25 ⑥ | 15 | 20 | — | — | — | ③ | ③ |
| | 60 | H or R | 40 ⑥ | 50 ⑥ | 30 | 50 | — | — | — | ③ | ③ |
| | 100 | H or R | 50 ⑥ | 50 ⑥ | 60 | 75 | — | — | — | ③ | ③ |
| | 200 | H or R | — | — | 125 | 150 | 40 | — | — | ③ | ③ |
| | 400 | H or R | — | — | 250 | 350 | 50 | — | — | ③ | ③ |
| | 600 | H or R | — | — | 400 | 500 | — | — | — | ③ | ③ |
| | 800 | L | — | — | — | — | — | — | — | ③ | ③ |

***Notes***

① DC rating for 800 A switches is 250 V.
② 30 A heavy-duty switches with Type J fuse provisions are available from the factory only.
③ Contact the Safety Switch Flex Center at FlexSwitches@eaton.com for availability of this product.
④ Use three-pole catalog numbers below for 600 Vac, 250 Vdc maximum applications.
⑤ 1200 A is not service entrance rated at 600 V.
⑥ Ratings are for two-phase AC.

1

DH362UGK

## 600 Vac Heavy-Duty, Non-Fusible, Single-Throw, 277/480–600 V—NEMA 1, 3R, 12/3R

| System | Ampere Rating | Maximum Horsepower Ratings Single-Phase AC 240 V | 480 V | 600 V | Three-Phase AC 240 V | 480 V | 600 V | DC 250 V | 600 V | NEMA 1 Enclosure Indoor Catalog Number | NEMA 3R Enclosure Rainproof Catalog Number | NEMA 12/3R Enclosure Industrial, Dust-Tight Catalog Number |
|---|---|---|---|---|---|---|---|---|---|---|---|---|
| **Two-Pole—480 Vac—600 Vac or Vdc (Suitable for Service Entrance Use with a Neutral Kit Installed)** | | | | | | | | | | | | |
| | 30 | 3 | 7-1/2 | 10 | — | — | — | — | 15 | **DH261UGK** | **DH261URK** | **DH261UDK** ④ |
| | 60 | 10 | 20 | 25 | — | — | — | — | 25 | **DH262UGK** | **DH262URK** | **DH262UDK** ④ |
| | 100 | 20 | 30 | 40 | — | — | — | 20 | 25 | **DH263UGK** | **DH263URK** | **DH263UDK** ④ |
| | 200 | 15 | 50 | 50 | — | — | — | — | 50 | **DH264UGK** | **DH264URK** | **DH264UDK** ④ |
| | 400 | — | — | — | — | — | — | 50 | 50 | **DH265UGK** | **DH265URK** | **DH265UDK** ④ |
| | 600 | — | — | — | — | — | — | — | 50 | **DH266UGK** | **DH266URK** | **DH266UDK** ④ |
| | 800 | — | — | — | — | — | — | — | — | **DH267UGK** | **DH267URK** | **DH267UDK** ④ |
| | 1200 | — | — | — | — | — | — | — | — | **DH268UGK** | **DH268URK** | **DH267UDK** |
| **Three-Pole—480 Vac—600 Vac, 250 Vdc (Suitable for Service Entrance Use with a Neutral Kit Installed)** | | | | | | | | | | | | |
| | 30 | 3 | 7-1/2 | 10 | 10 | 20 | 30 | 5 | — | **DH361UGK** | **DH361URK** | **DH361UDK** ④ |
| | 60 | 10 | 20 | 25 | 20 | 50 | 60 | 10 | — | **DH362UGK** | **DH362URK** | **DH362UDK** ④ |
| | 100 | 20 | 40 | 50 | 40 | 75 | 100 | 20 | — | **DH363UGK** | **DH363URK** | **DH363UDK** ④ |
| | 200 | 15 | 50 | 50 | 60 | 125 | 150 | 40 | — | **DH364UGK** | **DH364URK** | **DH364UDK** ④ |
| | 400 | — | — | — | 125 | 250 | 350 | 50 | — | **DH365UGK** | **DH365URK** | **DH365UDK** ④ |
| | 600 | — | — | — | 200 | 400 | 500 | — | — | **DH366UGK** | **DH366URK** | **DH366UDK** ④ |
| | 800 | — | — | — | — | 500 | 500 | — | — | **DH367UGK** | **DH367URK** | **DH367UDK** ④ |
| | 1200 | — | — | — | — | 500 | 500 | — | — | **DH368UGK** ② | **DH368URK** ② | **DH368UDK** ② |
| **Four-Pole—480 Vac—600 Vac, 250 Vdc** | | | | | | | | | | | | |
| 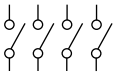 | 30 | 10 ③ | 20 ③ | 25 ③ | 10 | 20 | 30 | 5 | — | **DH461UGK** | — | **DH461UDK** ④ |
| | 60 | 20 ③ | 40 ③ | 50 ③ | 20 | 50 | 60 | 10 | — | **DH462UGK** | — | **DH462UDK** ④ |
| | 100 | 40 ③ | 50 ③ | 50 ③ | 40 | 75 | 100 | 20 | — | **DH463UGK** | — | **DH463UDK** ④ |
| | 200 | 50 ③ | 50 ③ | 50 ③ | 60 | 125 | 150 | 40 | — | **DH464UGK** | — | **DH464UDK** ④ |
| | 400 | 50 ③ | — | — | 125 | 250 | 350 | 50 | — | **DH465UGK** | ① | ①④ |
| | 600 | — | — | — | 200 | 400 | 500 | — | — | **DH466UGK** | ① | ①④ |
| | 800 | — | — | — | — | — | — | — | — | ① | ① | ①④ |

***Notes***

① Contact the Safety Switch Flex Center at FlexSwitches@eaton.com for availability of this product.
② 1200 A/480 V service entrance must include ground fault protection to meet NEC 230.95; see Shunt Trip Safety Switches on **page V2-T1-67**.
③ Ratings are for two-phase AC.
④ NEMA 12/3R enclosures (30–1200 A) can be field modified to meet NEMA 3R rainproof requirements when a factory-provided drain hole is opened.

DH361UWK

## 600 Vac Heavy-Duty, Non-Fusible, Single-Throw, 277/480–600 V—NEMA 4, 4X, 4X 316 Stainless Steel

| System | Ampere Rating | Maximum Horsepower Ratings Single-Phase AC 240 V | 480 V | 600 V | Three-Phase AC 240 V | 480 V | 600 V | DC 250 V | 600 V | NEMA 4 Enclosure Watertight, Painted Steel Catalog Number | NEMA 4X Enclosure Corrosion-Resistant, Stainless Steel Catalog Number | NEMA 4X Enclosure Corrosion-Resistant, 316-Grade Stainless Steel Catalog Number |
|---|---|---|---|---|---|---|---|---|---|---|---|---|
| **Two-Pole—480 Vac—600 Vac or Vdc ① (Suitable for Service Entrance Use with a Neutral Kit Installed)** | | | | | | | | | | | | |
| | 30 | 3 | 7-1/2 | 10 | — | — | — | — | 15 | — | ② or ③ | ② or ③ |
| | 60 | 10 | 20 | 25 | — | — | — | — | 25 | — | ② or ③ | ② or ③ |
| | 100 | 20 | 30 | 40 | — | — | — | 20 | 25 | — | ② or ③ | ② or ③ |
| | 200 | 15 | 50 | 50 | — | — | — | — | 50 | — | ② or ③ | ② or ③ |
| | 400 | — | — | — | — | — | — | 50 | — | ③ | ② or ③ | ② or ③ |
| | 600 | — | — | — | — | — | — | — | — | ③ | ② or ③ | ② or ③ |
| | 800 | — | — | — | — | — | — | — | — | ③ | ② or ③ | ② or ③ |
| | 1200 | — | — | — | — | — | — | — | — | — | ② | ② |
| **Three-Pole—480 Vac—600 Vac, 250 Vdc (Suitable for Service Entrance Use with a Neutral Kit Installed)** | | | | | | | | | | | | |
| | 30 | 3 | 7-1/2 | 10 | 10 | 20 | 30 | 5 | — | — | **DH361UWK** | **DH361UWK316** |
| | 60 | 10 | 20 | 25 | 20 | 50 | 60 | 10 | — | — | **DH362UWK** | **DH362UWK316** |
| | 100 | 20 | 40 | 50 | 40 | 75 | 100 | 20 | — | — | **DH363UWK** | **DH363UWK316** |
| | 200 | 15 | 50 | 50 | 60 | 125 | 150 | 40 | — | — | **DH364UWK** | **DH364UWK316** |
| | 400 | — | — | — | 125 | 250 | 350 | 50 | — | **DH365UPK** | **DH365UWK** | **DH365UWK316** |
| | 600 | — | — | — | 200 | 400 | 500 | — | — | **DH366UPK** | **DH366UWK** | **DH366UWK316** |
| | 800 | — | — | — | — | 500 | 500 | — | — | **DH367UPK** | **DH367UWK** | **DH367UWK316** |
| | 1200 | — | — | — | — | 500 | 500 | — | — | — | **DH368UWK** ④ | **DH368UWK316** ④ |
| **Four-Pole—480 Vac—600 Vac, 250 Vdc** | | | | | | | | | | | | |
| 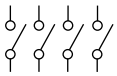 | 30 | 10 ⑤ | 20 ⑤ | 25 ⑤ | 10 | 20 | 30 | 5 | — | — | **DH461UWK** | **DH461UWK316** |
| | 60 | 20 ⑤ | 40 ⑤ | 50 ⑤ | 20 | 50 | 60 | 10 | — | — | ② | ② |
| | 100 | 40 ⑤ | 50 ⑤ | 50 ⑤ | 40 | 75 | 100 | 20 | — | — | ② | ② |
| | 200 | 50 ⑤ | 50 ⑤ | 50 ⑤ | 60 | 125 | 150 | 40 | — | — | ② | ② |
| | 400 | 50 ⑤ | — | — | 125 | 250 | 350 | 50 | — | — | ② | ② |
| | 600 | — | — | — | 200 | 400 | 500 | — | — | — | ② | ② |
| | 800 | — | — | — | — | — | — | — | — | — | ② | ② |

***Notes***

① DC rating for 800 A switches is 250 V.
② Contact the Safety Switch Flex Center at FlexSwitches@eaton.com for availability of this product.
③ Use three-pole catalog numbers below for 600 Vac, 250 Vdc maximum applications. For 600 Vdc, see note ②.
④ 1200 A/480 V service entrance must include ground fault protection to meet NEC 230.95; see Shunt Trip Safety Switches on **page V2-T1-67**.
⑤ Ratings are for two-phase AC.

1

## Dimensions

Approximate Dimensions in Inches (mm)

**Note:** Dimensions are for estimating purposes only.

### Heavy-Duty, Non-Fusible, 600 V, Three-Pole, Single-Throw

| Ampere Rating | Width (W) | Height (H) | Depth (D) | Depth (D2) | Weight Lb (kg) |
|---|---|---|---|---|---|
| **NEMA 1, 3R** | | | | | |
| 30 | 8.13 (206.5) | 15.88 (403.4) | 10.00 (254.0) | 5.25 (133.3) | 16 (7.264) |
| 60 | 8.13 (206.5) | 15.88 (403.4) | 10.00 (254.0) | 5.25 (133.3) | 16 (7.264) |
| 100 | 11.13 (282.7) | 21.69 (550.9) | 10.00 (254.0) | 5.25 (133.3) | 22 (9.988) |
| 200 | 16.00 (406.4) | 27.66 (702.5) | 11.25 (285.5) | 6.14 (156.0) | 46 (20.884) |
| 400 | 24.12 (612.6) | 44.31 (1125.5) | 12.39 (314.7) | 7.27 (184.7) | 110 (49.94) |
| 600 | 25.12 (638.0) | 51.82 (1316.2) | 14.07 (357.4) | 8.95 (227.3) | 135 (61.29) |
| 800 | 26.37 (669.8) | 55.82 (1417.8) | 14.07 (357.4) | 8.95 (227.3) | 158 (71.732) |
| 1200 | 43.12 (1095.2) | 70.97 (1802.6) | 17.12 (434.8) | 12.43 (315.7) | 430 (195.22) |
| **NEMA 12/3R, 4X Stainless Steel, 4, 4X 316 Stainless Steel** | | | | | |
| 30 | 8.76 (222.5) | 14.14 (359.2) | 10.22 (259.6) | 5.50 (139.7) | 17 (7.718) |
| 60 | 8.76 (222.5) | 14.14 (359.2) | 10.22 (259.6) | 5.50 (139.7) | 17 (7.718) |
| 100 | 11.79 (299.5) | 24.95 (633.7) | 10.22 (259.6) | 5.50 (139.7) | 28 (12.712) |
| 200 | 16.95 (430.5) | 35.38 (898.7) | 11.63 (295.4) | 6.44 (163.6) | 55 (24.97) |
| 400 | 24.12 (612.6) | 57.47 (1459.7) | 12.43 (320.8) | 7.19 (182.6) | 125 (56.75) |
| 600 | 25.01 (635.3) | 62.97 (1599.4) | 12.79 (324.9) | 8.95 (227.3) | 167 (75.818) |
| 800 | 26.35 (669.3) | 71.72 (1821.7) | 12.79 (324.9) | 8.95 (227.3) | 175 (79.45) |
| 1200 | 43.11 (1095.0) | 73.77 (1873.8) | 17.15 (435.6) | 12.45 (316.2) | 475 (215.65) |

### Heavy-Duty, Fusible, 240 V and 600 V, Three-Pole Solid Neutral, Single-Throw

| Ampere Rating | Width (W) | Height (H) | Depth (D) | Depth (D2) | Weight Lb (kg) |
|---|---|---|---|---|---|
| **NEMA 1, 3R** | | | | | |
| 30 | 8.13 (206.5) | 15.88 (403.4) | 10.00 (254.0) | 5.25 (133.3) | 20 (9.08) |
| 60 | 8.13 (206.5) | 15.88 (403.4) | 10.00 (254.0) | 5.25 (133.3) | 20 (9.08) |
| 100 | 11.13 (282.7) | 21.69 (550.9) | 10.00 (254.0) | 5.25 (133.3) | 27 (12.258) |
| 200 | 16.00 (406.4) | 27.66 (702.5) | 11.25 (285.5) | 6.14 (156.0) | 46 (20.884) |
| 400 | 24.12 (612.6) | 44.31 (1125.5) | 12.39 (314.7) | 7.27 (184.7) | 110 (49.94) |
| 600 | 25.12 (638.0) | 51.82 (1316.2) | 14.07 (357.4) | 8.95 (227.3) | 135 (61.29) |
| 800 | 26.37 (669.8) | 55.82 (1417.8) | 14.07 (357.4) | 8.95 (227.3) | 158 (71.732) |
| 1200 | 43.12 (1095.2) | 70.97 (1802.6) | 17.12 (434.8) | 12.43 (315.7) | 430 (195.22) |
| **NEMA 12/3R, 4X Stainless Steel, 4, 4X 316 Stainless Steel** | | | | | |
| 30 | 8.76 (222.5) | 19.08 (359.2) | 10.22 (259.6) | 5.50 (139.7) | 22 (9.988) |
| 60 | 8.76 (222.5) | 19.08 (359.2) | 10.22 (259.6) | 5.50 (139.7) | 22 (9.988) |
| 100 | 11.79 (299.5) | 24.95 (633.7) | 10.22 (259.6) | 5.50 (139.7) | 28 (12.712) |
| 200 | 16.95 (430.5) | 35.38 (898.7) | 11.63 (295.4) | 6.44 (163.6) | 55 (24.97) |
| 400 | 24.12 (612.6) | 57.47 (1459.7) | 12.43 (320.8) | 7.19 (182.6) | 125 (56.75) |
| 600 | 25.01 (635.3) | 62.97 (1599.4) | 12.79 (324.9) | 8.95 (227.3) | 167 (75.818) |
| 800 | 26.35 (669.3) | 71.72 (1821.7) | 12.79 (324.9) | 8.95 (227.3) | 175 (79.45) |
| 1200 | 43.11 (1095.0) | 73.77 (1873.8) | 17.15 (435.6) | 12.45 (316.2) | 475 (215.65) |

### NEMA 1, 3R Heavy-Duty 30–1200 A

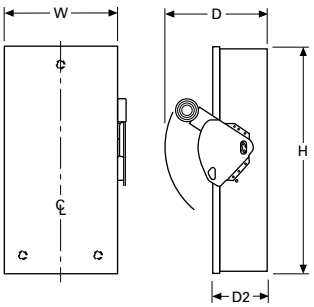


### NEMA 4, 4X and 12/3R Heavy-Duty 30–1200 A

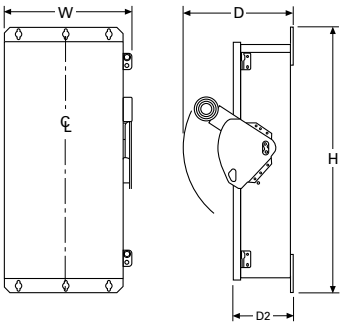


**Note:** A factory-installed ground lug is supplied in all heavy-duty safety switches.

Heavy-Duty Safety Switch

## Contents


| *Description* | *Page* |
|---|---|
| Product Overview | **V2-T1-2** |
| General-Duty | **V2-T1-25** |
| Heavy-Duty | |
| Heavy-Duty 800 Vac and 1000 Vac Switches | |
| Dimensions | **V2-T1-40** |
| Technical Data and Specifications | **V2-T1-40** |
| Heavy-Duty Double-Door Safety Switch | **V2-T1-41** |
| Six-Pole Switches | **V2-T1-45** |
| Double-Throw Switches | **V2-T1-48** |
| EnviroLine Stainless Steel Switch | **V2-T1-55** |
| Window Switches | **V2-T1-59** |
| Receptacle Switches | **V2-T1-62** |
| Non-Metallic KRYDON Switch | **V2-T1-64** |
| Shunt Trip Safety Switch | **V2-T1-67** |
| NEMA 7/9—Hazardous Location Disconnect Switch | **V2-T1-70** |
| Quick-Connect Switches | **V2-T1-72** |
| DC Disconnect Switches | **V2-T1-77** |
| Mill-Duty Rated, Heavy-Duty Safety Switch | **V2-T1-86** |
| Elevator Control Switch | **V2-T1-88** |
| Auxiliary Power Heavy-Duty Safety Switch | **V2-T1-91** |
| Left-Handed Safety Switch | **V2-T1-95** |
| Heavy-Duty Surge Switch | **V2-T1-96** |
| EZ Isolator™ (OLI) Switch | **V2-T1-98** |
| Pringle Bolted Pressure Switch | **V2-T1-101** |
| Type DS, Fusible and Non-Fusible | **V2-T1-104** |
| Type Visi-Flex DE-ION | **V2-T1-107** |
| Flange Mounted—Variable Depth | **V2-T1-111** |
| Flange Mounted—Fixed Depth | |


## Heavy-Duty 800 Vac and 1000 Vac Switches

### Product Description

Eaton's Energy Transition switches are rated for bidirectional flow of power as well as for increased AC voltages required with higher-rated inverters. Additionally, their heavy-duty safety switch design protects people, property and investment, and their proven reliability can meet your current and future energy transition needs.

### Features, Benefits and Functions

- cULus listed for reverse power flow
- Enhanced visible blade (viewing window optional)
- Load break rated
- Visible ON/OFF indication
- Padlockable in the OFF position
- 800 Vac and 1000 Vac

### Options/Accessories

- Viewing window with visible blade compliant with EUSERC requirements
- Lock-on provision
- Additional grounding
- Custom painted enclosures
- Voltage indicators
- Auxiliary contacts
- Neutral

### Standards and Certifications

- cULus listed

C UL US LISTED

1

## Technical Data and Specifications

| Catalog Number | Ampere Rating | Protection | Fuse Type | NEMA Rating | SCCR Rating | Lug Capacity ① | Wire Type |
|---|---|---|---|---|---|---|---|
| **800 Vac, Three-Pole, Enhanced Visible Blade** | | | | | | | |
| **DH384UDKV** | 200 A | Non-Fusible | — | 12/3R | 10 kA | #6–300 kcmil | CU/AL |
| **DH384UWKV** | 200 A | Non-Fusible | — | 4X ② | 10 kA | | |
| **DH385UDKV** | 400 A | Non-Fusible | — | 12/3R | 10 kA | (2) 1/0–(2) 300 kcmil or (1) 1/0–(1) 750 kcmil | |
| **DH385UWKV** | 400 A | Non-Fusible | — | 4X ② | 10 kA | | |
| **800 Vac, Three-Pole, Enhanced Visible Blade** | | | | | | | |
| **DH384FDKV** | 200 A | Fusible | NH | 12/3R | 65 kA | #6–300 kcmil | CU/AL |
| **DH384FWKV** | 200 A | Fusible | NH | 4X ② | 65 kA | | |
| **DH385FDKV** | 400 A | Fusible | NH | 12/3R | 65 kA | (2) 1/0–(2) 300 kcmil or (1) 1/0–(1) 750 kcmil | |
| **DH385FWKV** | 400 A | Fusible | NH | 4X ② | 65 kA | | |
| **1000 Vac, Three-Pole, Enhanced Visible Blade** | | | | | | | |
| **DH314UDKV** | 200 A | Non-Fusible | — | 12/3R | 10 kA | #6–300 kcmil | CU/AL |
| **DH314UWKV** | 200 A | Non-Fusible | — | 4X ② | 10 kA | | |
| **DH315UDKV** | 400 A | Non-Fusible | — | 12/3R | 10 kA | (2) 1/0–(2) 300 kcmil or (1) 1/0–(1) 750 kcmil | |
| **DH315UWKV** | 400 A | Non-Fusible | — | 4X ② | 10 kA | | |

***Notes***

① For applications that require multiple lugs, contact the Flex Center at FlexSwitches@eaton.com for more information.

② Stainless steel, 304 (316 available via the Flex Center).

## Dimensions

Dimensions in Inches (mm)

| Ampere Rating | Width | Height | Depth (D1) | Depth (D2) | Weight Lb (kg) |
|---|---|---|---|---|---|
| **NEMA 12/3R** | | | | | |
| 200 | 16.95 (430.5) | 35.38 (898.7) | 11.63 (295.4) | 6.44 (163.6) | 46 (20.884) |
| 400 | 24.12 (612.6) | 57.47 (1459.7) | 12.43 (320.8) | 7.19 (182.6) | 110 (49.94) |
| **NEMA 4X Stainless Steel** | | | | | |
| 200 | 16.95 (430.5) | 35.38 (898.7) | 11.63 (295.4) | 6.44 (163.6) | 55 (24.97) |
| 400 | 24.12 (612.6) | 57.47 (1459.7) | 12.43 (320.8) | 7.19 (182.6) | 125 (56.75) |

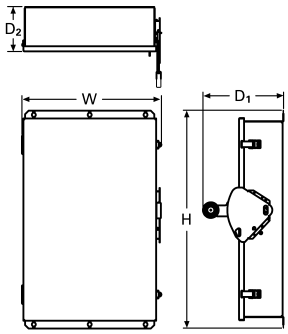

Heavy-Duty Double-Door Safety Switch

## Contents


| *Description* | *Page* |
|---|---|
| Product Overview | **V2-T1-2** |
| General-Duty | **V2-T1-25** |
| Heavy-Duty | **V2-T1-30** |
| Heavy-Duty 800 Vac and 1000 Vac Switches | **V2-T1-39** |
| Heavy-Duty Double-Door Safety Switch | |
| Catalog Number Selection | **V2-T1-42** |
| Product Selection | **V2-T1-43** |
| Modifications | **V2-T1-44** |
| Technical Data and Specifications | **V2-T1-44** |
| Dimensions | **V2-T1-44** |
| Six-Pole Switches | |
| Double-Throw Switches | **V2-T1-48** |
| EnviroLine Stainless Steel Switch | **V2-T1-55** |
| Window Switches | **V2-T1-59** |
| Receptacle Switches | **V2-T1-62** |
| Non-Metallic KRYDON Switch | **V2-T1-64** |
| Shunt Trip Safety Switch | **V2-T1-67** |
| NEMA 7/9—Hazardous Location Disconnect Switch | **V2-T1-70** |
| Quick-Connect Switches | **V2-T1-72** |
| DC Disconnect Switches | **V2-T1-77** |
| Mill-Duty Rated, Heavy-Duty Safety Switch | **V2-T1-86** |
| Elevator Control Switch | **V2-T1-88** |
| Auxiliary Power Heavy-Duty Safety Switch | **V2-T1-91** |
| Left-Handed Safety Switch | **V2-T1-95** |
| Heavy-Duty Surge Switch | **V2-T1-96** |
| EZ Isolator™ (OLI) Switch | **V2-T1-98** |
| Pringle Bolted Pressure Switch | **V2-T1-101** |
| Type DS, Fusible and Non-Fusible | **V2-T1-104** |
| Type Visi-Flex DE-ION | **V2-T1-107** |
| Flange Mounted—Variable Depth | **V2-T1-111** |
| Flange Mounted—Fixed Depth | **V2-T1-115** |


## Heavy-Duty Double-Door Safety Switch

### Product Description

Eaton's double-door safety switch is the industry's first compartmentalized fusible safety switch. The revolutionary two-door design includes an internal barrier that separates the upper switching compartment from the lower fuse compartment. This allows operators to access the fuse compartment with no exposure to line-side power, providing enhanced safety during fuse replacement.

### Features

- 30–1200 A
- NEMA 12/3R and NEMA 4X stainless enclosures
- External viewing window over switching blade standard
- Enhanced visible blades included
- Interlocking mechanism keeps door closed when the switch is ON
- Optional voltage monitors

### Standards and Certifications

- UL 98 Standard, file no. E5239

Listed

1

## Catalog Number Selection

### Heavy-Duty Double-Door Safety Switch

**DD 3 6 3 F D K W - 00LO**

**Switch Type**
**DD** = Heavy-duty isolation switch

**Poles/Blades**
**2** = Two-pole
**3** = Three-pole
**4** = Four-pole

**Voltage**
**2** = 240 Vac
**6** = 600 Vac

**Ampere Rating**

| | |
|---|---|
| **1** = 30 A | **5** = 400 A |
| **2** = 60 A | **6** = 600 A |
| **3** = 100 A | **7** = 800 A |
| **4** = 200 A | **8** = 1200 A |

**Fusible/Non-Fusible or Neutral**
**F** = Fusible without neutral
**N** = Fusible with neutral
**SN** = Fusible with switched neutral

**NEMA Enclosure**
**D** = NEMA 12/3R
**W** = NEMA 4X Stainless

**Series**
**K** = Switch

**Options**
**W** = Upper viewing window

**Options/Modifications**
**00V1** = Voltage indicator line side
**00V2** = Voltage indicator load side
**00V3** = Voltage indicator line and load side
**BLAK** = Painted black
**WHIT** = Painted white
**0RED** = Painted red
**0316** = 316 stainless steel
**00NP** = Custom nameplate
**00TK** = Trapped key (Kirk®, superior)
**00LW** = Lower viewing window
**00CP** = Control pole (same make/same break)
**0CP2** = Control pole (late make/early break)
**0002** = 1NO/1NC auxiliary contact
**0003** = NO/2NC auxiliary contact
**00LO** = Lock on

## Product Selection

DD321FDKW

### 240 Vac Heavy-Duty Double-Door, Fusible—NEMA 12/3R, 4X

| System | Ampere Rating | Fuse Type Provision | Maximum hp Ratings with Time Delay Fuses: Single-Phase AC 480 V | Single-Phase AC 600 V | Three-Phase AC 480 V | Three-Phase AC 600 V | DC 250 V | DC 600 V | NEMA 12/3R Enclosure Dust-tight Catalog Number | NEMA 4X Enclosure Watertight Catalog Number |
|---|---|---|---|---|---|---|---|---|---|---|
| **Three-Pole, 240 Vac, 250 Vdc (Suitable for Service Entrance Use with a Neutral Kit Installed)** | | | | | | | | | | |
| | 30 | H or R | 7.5 | 10 | 15 | 20 | — | — | **DD321FDKW** | **DD321FWKW** |
| | 60 | H or R | 20 | 25 | 30 | 50 | — | — | **DD322FDKW** | **DD322FWKW** |
| | 100 | H or R | 30 | 40 | 60 | 75 | — | — | **DD323FDKW** | **DD323FWKW** |
| | 200 | H or R | 50 | 50 | 125 | 150 | — | — | **DD324FDKW** | **DD324FWKW** |
| | 400 | H or R | — | — | 250 | 350 | — | — | **DD325FDKW** | **DD325FWKW** |
| | 600 | H or R | — | — | 400 | 500 | — | — | **DD326FDKW** | **DD326FWKW** |
| | 800 | L | — | — | 500 | 500 | — | — | **DD327FDKW** | **DD327FWKW** |
| | 1200 | L | — | — | 500 | 500 | — | — | **DD328FDKW** | **DD328NWKW** |
| **Four-Wire (Three Blades, Three Fuses, S/N) 240 Vac, 250 Vdc** | | | | | | | | | | |
| | 30 | H or R | 7.5 | 10 | 15 | 20 | — | — | **DD321NDKW** | **DD321NWKW** |
| | 60 | H or R | 20 | 25 | 30 | 50 | — | — | **DD322NDKW** | **DD322NWKW** |
| | 100 | H or R | 30 | 40 | 60 | 75 | — | — | **DD323NDKW** | **DD323NWKW** |
| | 200 | H or R | 50 | 50 | 125 | 150 | — | — | **DD324NDKW** | **DD324NWKW** |
| | 400 | H or R | — | — | 250 | 350 | — | — | **DD325NDKW** | **DD325NWKW** |
| | 600 | H or R | — | — | 400 | 500 | — | — | **DD326NDKW** | **DD326NWKW** |
| | 800 | L | — | — | 500 | 500 | — | — | **DD327NDKW** | **DD327NWKW** |
| | 1200 | L | — | — | 500 | 500 | — | — | **DD328NDKW** | **DD328NWKW** |

DD361FDKW

### 600 Vac Heavy-Duty Double-Door, Fusible—NEMA 12/3R, 4X

| System | Ampere Rating | Fuse Type Provision | Maximum hp Ratings with Time Delay Fuses: Single-Phase AC 480 V | Single-Phase AC 600 V | Three-Phase AC 480 V | Three-Phase AC 600 V | DC 250 V | DC 600 V | NEMA 12/3R Enclosure Dust-tight Catalog Number | NEMA 4X Enclosure Watertight Catalog Number |
|---|---|---|---|---|---|---|---|---|---|---|
| **Three-Pole, 480 Vac–600 Vac or Vdc (Suitable for Service Entrance Use with a Neutral Kit Installed)** | | | | | | | | | | |
| | 30 | H or R | 7.5 | 10 | 15 | 20 | — | — | **DD361FDKW** | **DD361FWKW** |
| | 60 | H or R | 20 | 25 | 30 | 50 | — | — | **DD362FDKW** | **DD362FWKW** |
| | 100 | H or R | 30 | 40 | 60 | 75 | — | — | **DD363FDKW** | **DD363FWKW** |
| | 200 | H or R | 50 | 50 | 125 | 150 | — | — | **DD364FDKW** | **DD364FWKW** |
| | 400 | H or R | — | — | 250 | 350 | — | — | **DD365FDKW** | **DD365FWKW** |
| | 600 | H or R | — | — | 400 | 500 | — | — | **DD366FDKW** | **DD366FWKW** |
| | 800 | L | — | — | 500 | 500 | — | — | **DD367FDKW** | **DD367FWKW** |
| | 1200 | L | — | — | 500 | 500 | — | — | **DD368FDKW** ① | **DD368NWKW** ① |
| **Four-Wire (Three Blades, Three Fuses, S/N) 480 Vac–600 Vac, 250 Vdc** | | | | | | | | | | |
| | 30 | H or R | 7.5 | 10 | 15 | 20 | — | — | **DD361NDKW** | **DD361NWKW** |
| | 60 | H or R | 20 | 25 | 30 | 50 | — | — | **DD362NDKW** | **DD362NWKW** |
| | 100 | H or R | 30 | 40 | 60 | 75 | — | — | **DD363NDKW** | **DD363NWKW** |
| | 200 | H or R | 50 | 50 | 125 | 150 | — | — | **DD364NDKW** | **DD364NWKW** |
| | 400 | H or R | — | — | 250 | 350 | — | — | **DD365NDKW** | **DD365NWKW** |
| | 600 | H or R | — | — | 400 | 500 | — | — | **DD366NDKW** | **DD366NWKW** |
| | 800 | L | — | — | 500 | 500 | — | — | **DD367NDKW** | **DD367NWKW** |
| | 1200 | L | — | — | 500 | 500 | — | — | **DD368NDKW** ① | **DD368NWKW** ① |

***Note***

① 1200 A is not service entrance rated at 600 V.

1

## Modifications

Additions are available such as custom paint, 316-stainless enclosures, custom OEM labeling and more.

Call the Flex Center at 1-888-329-9272 or FlexSwitches@Eaton.com for more information.

## Technical Data and Specifications

### Ratings and Capacities

| Ampere Rating | Factory Fuse Class | Optional Fuse Class ① | Standard Lug Capacities Per Phase Min. Wire Size | Max. Wire Size | Ground ② Min. Wire Size | Max. Wire Size |
|---|---|---|---|---|---|---|
| 30 | H or R | J, R | #14 | #2 | #14 | #4 |
| 60 | H or R | J, R | #14 | #2 | #14 | #4 |
| 100 | H or R | J, R | #14 | 1/0 | #14 | #4 |
| 200 | H or R | J, R, T | #6 | 300 kcmil | #14 | #2 |
| 400 | H or R | J, R, T | (2) 1/0 or (1) 1/0 | (2) 300 kcmil–1/0 or ③ (1) 750 kcmil–1/0 | #6 | 250 kcmil |
| 600 | H or R | J, R, T | (1) #2 (1) #2 | (1) 600 kcmil and ④ (1) 750 kcmil | #6 | 250 kcmil |
| 800 | L | T | (4) 1/0 | (4) 750 kcmil | #6 | 250 kcmil |
| 1200 | L | T | (4) 1/0 | (4) 750 kcmil | #6 | 250 kcmil |

### Cable IN/OUT Reference Chart

| | Top IN ⑤ | Bottom IN |
|---|---|---|
| Top OUT | ■ | — |
| Bottom OUT | ■ | ■ |

## Dimensions

Approximate Dimensions in Inches (mm)

**Note:** Dimensions are for estimating purposes only.

### Heavy-Duty Double-Door Safety Switch

| Ampere Rating | Height (H) | Width (W) | Depth (D1) | Depth (D2) |
|---|---|---|---|---|
| 30/60 | 37.49 (952.3) | 9.30 (236.2) | 8.22 (208.8) | 6.37 (161.8) |
| 100 | 39.19 (995.4) | 12.33 (313.2) | 10.21 (259.3) | 6.37 (161.8) |
| 200 | 49.90 (1267.5) | 17.18 (436.4) | 11.62 (295.1) | 7.31 (185.7) |
| 400 | 72.46 (1840.5) | 24.32 (617.7) | 16.41 (416.8) | 14.56 (369.8) |
| 600 | 77.96 (1980.2) | 25.32 (643.1) | 19.31 (490.5) | 17.80 (452.1) |
| 800 | 86.73 (2202.9) | 26.57 (674.9) | 22.16 (562.9) | 17.81 (452.4) |
| 1200 | 91.02 (2312.0) | 43.11 (1095.0) | 27.18 (690.4) | 21.23 (539.2) |

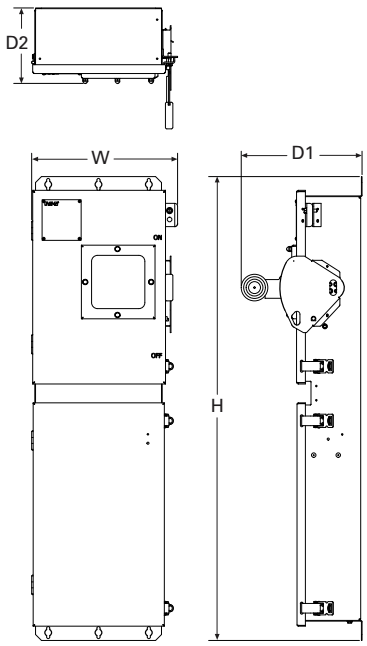


***Notes***

① Switches ranging from 30 A to 400 A can relocate clips/base for class J fuses. Class R fuse kit rejects all other size fuses except class R. All other classes/amperages require a kit. Please consult catalog or contact the Technical Resource Center (TRC) for specific kit catalog numbers.

② Lay-in type lug uses 30–100 A. Two ground lugs are provided for 200–1200 A switches, each accommodating the wire range listed above.

③ Single barrel lug that accepts one or two cables per phase as detailed above.

④ Double barrel lug that accepts two cables per phase as detailed above.

⑤ Remove wireway in bottom compartment. Necessary for 30–200 A units only.

**Six-Pole Motor Circuit**

## Contents


| *Description* | *Page* |
|---|---|
| Product Overview | **V2-T1-2** |
| General-Duty | **V2-T1-25** |
| Heavy-Duty | **V2-T1-30** |
| Heavy-Duty 800 Vac and 1000 Vac Switches | **V2-T1-39** |
| Heavy-Duty Double-Door Safety Switch | **V2-T1-41** |
| Six-Pole Switches | |
| Product Selection | **V2-T1-46** |
| Dimensions | **V2-T1-47** |
| Double-Throw Switches | **V2-T1-48** |
| EnviroLine Stainless Steel Switch | **V2-T1-55** |
| Window Switches | **V2-T1-59** |
| Receptacle Switches | **V2-T1-62** |
| Non-Metallic KRYDON Switch | **V2-T1-64** |
| Shunt Trip Safety Switch | **V2-T1-67** |
| NEMA 7/9—Hazardous Location Disconnect Switch | **V2-T1-70** |
| Quick-Connect Switches | **V2-T1-72** |
| DC Disconnect Switches | **V2-T1-77** |
| Mill-Duty Rated, Heavy-Duty Safety Switch | **V2-T1-86** |
| Elevator Control Switch | **V2-T1-88** |
| Auxiliary Power Heavy-Duty Safety Switch | **V2-T1-91** |
| Left-Handed Safety Switch | **V2-T1-95** |
| Heavy-Duty Surge Switch | **V2-T1-96** |
| EZ Isolator™ (OLI) Switch | **V2-T1-98** |
| Pringle Bolted Pressure Switch | **V2-T1-101** |
| Type DS, Fusible and Non-Fusible | **V2-T1-104** |
| Type Visi-Flex DE-ION | **V2-T1-107** |
| Flange Mounted—Variable Depth | **V2-T1-111** |
| Flange Mounted—Fixed Depth | **V2-T1-115** |


## Six-Pole Switches

### Product Description

- 600 Vac, 250 Vdc maximum
- 30–200 A UL listed
- 400–800 A available, non-UL listed
- Fusible or non-fusible

### Application Description

A compact safety switch is ideal for use in heavy industry and for when an "in sight" disconnecting means is required for two-speed motors that are remote from their motor control devices.

### Features, Benefits and Functions

- Trunk-type latches keep the cover tightly closed and a neoprene gasket seals out moisture and dust from the switch assembly
- Visible double-break quick-make, quick-break rotary blade mechanism. Two points of contact provide a positive open and close, easier operation, and also help prevent contact burning for longer contact life
- Clear line shield protection
- Built-in fuse pullers
- Clearly visible handle
- Triple padlocking capability; cabinet door can be further padlocked at the top and bottom
- Deionizing arc chutes; arc chutes confine and suppress the arcs produced by opening contacts under load
- For factory modifications, refer to **Page V2-T1-15**

### Standards and Certifications

- UL listed File No. E5239
- UL 98
- NEMA Std KS-1

Listed

#### *Seismic Qualifications*

- Heavy-duty switches exceed the requirements of Uniform Building Code (UBC) and California Code Title 24 OSP-0011-10, OSP-0012-10

1

## Product Selection

### 600 Vac Heavy-Duty, Fusible, Six-Pole, Single-Throw

| System | Ampere Rating | Fuse Class | Maximum Horsepower Ratings, Three-Phase AC (Higher Rating with Time Delay Fuses) 240 V | 480 V | 600 V | NEMA 12/3R Enclosure Industrial, Dust-Tight Catalog Number | NEMA 4X Enclosure Corrosion-Resistant, Stainless Steel Catalog Number |
|---|---|---|---|---|---|---|---|
| **600 Vac with Fuse Clips—250 Vdc** | | | | | | | |
| 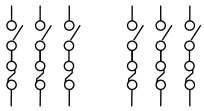 | 30 | H or R | 3–7-1/2 | 5–15 | 7-1/2–20 | **DH661FDK** ①② | **DH661FWK** ② |
| | 60 | H or R | 7-1/2–15 | 15–30 | 15–50 | **DH662FDK** ① | **DH662FWK** |
| | 100 | H or R | 15–30 | 25–60 | 30–75 | **DH663FDK** ① | **DH663FWK** |
| | 200 | H or R | 25–60 | 50–125 | 60–150 | **DH664FDK** ① | **DH664FWK** |
| | 400 | H or R | — | — | — | **DH665FDK** ③ | **DH665FWK** ③ |
| | 600 | H or R | — | — | — | **DH666FDK** ③ | ④ |
| | 800 | L | — | — | — | ④ | ④ |

**DH661UDK**

### 600 Vac Heavy-Duty, Non-Fusible, Six-Pole, Single-Throw

| System | Ampere Rating | Maximum Horsepower Ratings Three-Phase AC 240 V | 480 V | 600 V | Three-Phase DC 250 V | 600 V ⑤ | NEMA 12/3R Enclosure Industrial, Dust-Tight Catalog Number | NEMA 4X Enclosure Corrosion-Resistant, Stainless Steel Catalog Number |
|---|---|---|---|---|---|---|---|---|
| **600 Vac—250 Vdc** | | | | | | | | |
| 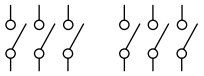 | 30 | 10 | 20 | 30 | 5 | 15 | **DH661UDK** ① | **DH661UWK** |
| | 60 | 20 | 50 | 60 | 10 | 25 | **DH662UDK** ① | **DH662UWK** |
| | 100 | 40 | 75 | 100 | 20 | 25 | **DH663UDK** ① | **DH663UWK** |
| | 200 | 60 | 125 | 150 | 40 | 50 | **DH664UDK** ① | **DH664UWK** |
| | 400 | — | — | — | — | — | **DH665UDK** ③ | **DH665UWK** ③ |
| | 600 | — | — | — | — | — | **DH666UDK** ③ | **DH666UWK** ③ |
| | 800 | — | — | — | — | — | ④ | ④ |

***Notes***

① NEMA 12/3R enclosures (30–800 A) can be field modified to meet NEMA 3R rainproof requirements when a factory-provided drain hole is opened.
② 30 A heavy-duty switches with Type J fuse provisions are available from the factory only.
③ Non-UL catalog numbers.
④ Contact the Safety Switch Flex Center at FlexSwitches@eaton.com for availability of this product.
⑤ 600 Vdc rating requires that the switch be wired per the wiring diagram on the device publication.

## Dimensions

Approximate Dimensions in Inches (mm)

**Note:** Dimensions are for estimating purposes only.

### 600 Vac Heavy-Duty, Six-Pole, Single-Throw

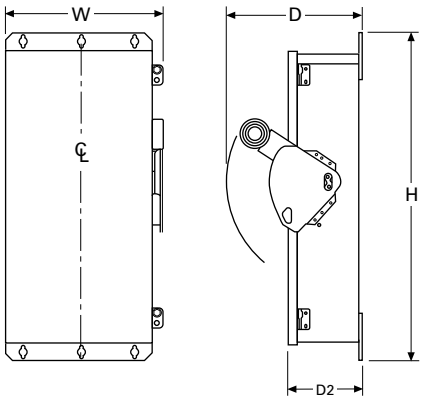


**Note:** A factory-installed ground lug is supplied in all heavy-duty safety switches.

### Six-Pole Switches, Fusible and Non-Fusible

| Amperage | NEMA Rating | Height (H) | Width (W) | Depth (D) | Depth (D2) | Weight Lb (kg) |
|---|---|---|---|---|---|---|
| 30 A | NEMA 12/3R and 4X | 12.17 (309.2) | 19.08 (484.6) | 10.22 (259.6) | 5.50 (139.7) | 40 (18.1) |
| 60 A | NEMA 12/3R and 4X | 12.17 (309.2) | 19.08 (484.6) | 10.22 (259.6) | 5.50 (139.7) | 40 (18.1) |
| 100 A | NEMA 12/3R and 4X | 15.42 (391.7) | 24.95 (633.7) | 10.22 (259.6) | 5.50 (139.7) | 45 (20.4) |
| 200 A | NEMA 12/3R and 4X | 23.51 (597.2) | 35.38 (898.7) | 11.63 (295.4) | 6.44 (163.6) | 65 (29.5) |

Heavy-Duty Double-Throw

## Contents


| *Description* | *Page* |
|---|---|
| Product Overview | **V2-T1-2** |
| General-Duty | **V2-T1-25** |
| Heavy-Duty | **V2-T1-30** |
| Heavy-Duty Double-Door Safety Switch | **V2-T1-41** |
| Six-Pole Switches | **V2-T1-45** |
| Double-Throw Switches | |
| Standards and Certifications | **V2-T1-49** |
| Product Selection | **V2-T1-49** |
| Technical Data and Specifications | **V2-T1-53** |
| Dimensions | **V2-T1-53** |
| EnviroLine Stainless Steel Switch | **V2-T1-55** |
| Window Switches | **V2-T1-59** |
| Receptacle Switches | **V2-T1-62** |
| Non-Metallic KRYDON Switch | **V2-T1-64** |
| Shunt Trip Safety Switch | **V2-T1-67** |
| NEMA 7/9—Hazardous Location Disconnect Switch | **V2-T1-70** |
| Quick-Connect Switches | **V2-T1-72** |
| DC Disconnect Switches | **V2-T1-77** |
| Mill-Duty Rated, Heavy-Duty Safety Switch | **V2-T1-86** |
| Elevator Control Switch | **V2-T1-88** |
| Auxiliary Power Heavy-Duty Safety Switch | **V2-T1-91** |
| Left-Handed Safety Switch | **V2-T1-95** |
| Heavy-Duty Surge Switch | **V2-T1-96** |
| EZ Isolator™ (OLI) Switch | **V2-T1-98** |
| Pringle Bolted Pressure Switch | **V2-T1-101** |
| Type DS, Fusible and Non-Fusible | **V2-T1-104** |
| Type Visi-Flex DE-ION | **V2-T1-107** |
| Flange Mounted—Variable Depth | **V2-T1-111** |
| Flange Mounted—Fixed Depth | **V2-T1-115** |


## Double-Throw Switches

### Product Description

Double-throw switches are used to transfer service from a normal power source to an alternate source, or to switch from one load circuit to another.

- 30–1200 A
- Horsepower rated
- 600 Vac, 250 Vdc maximum
- 600–1200 A fusible utilize common set of fuses as Eaton's stacked double-throw design. The stacked design is suitable for two source 1 load applications only
- 600–800 A fusible are available for one source 2 load applications; include an "R" at the end of the catalog number
- Fusible or non-fusible
- Fusible and non-fusible switches are 100% load break and 100% load make rated
- Suitable for service entrance applications unless otherwise noted
- The continuous load current of fusible switches is not to exceed 80% of the rating of fuses employed in other than motor circuits. Non-fusible switches are 100% fully rated
- Wiring configuration from factory allows a single load to be supplied by a normal or alternate source. 30–800 A can be field modified to allow two loads to be alternately supplied by a single power source, except for stacked design double-throw switches

### Features, Benefits and Functions

- Ample wire bending space provides for easier installation
- Visible double-break quick-make, quick-break rotary blade mechanism. Two points of contact provide a positive open and close, easier operation, and also help prevent contact burning for longer contact life
- Triple padlocking capability. Personnel safety feature since the large hasp can accommodate up to three 3/8-inch (9.5 mm) shank locks. Clearly visible handle. The position (ON or OFF) can be clearly seen from a distance
- Deionizing arc chutes; arc chutes confine and suppress the arcs produced by opening contacts under load
- Additional locking capability; cabinet door can be further padlocked at the top and bottom
- Clear line shield (provided on fusible double-throw) protects against accidental contact with energized parts. Probe holes enable the user to test if the line side is energized without removing the shield
- Tangential knockouts on sides, top and bottom. Enables any size of conduit to be mounted close to the wall, providing for cable installation closer to the wall and a neat appearance

## Standards and Certifications

- UL listed switching neutral capability is available on three-pole and four-pole non-fusible double-throw switches with the installation of the proper bonding kit shown on **Page V2-T1-13**
- Suitable for use as a manually operated switch per 2005 NEC Article 702
- UL listed File No. E5239
- UL 98
- NEMA Std KS-1

Listed

***Seismic Qualifications***

- Heavy-duty switches exceed the requirements of Uniform Building Code (UBC) and California Code Title 24 OSP-0011-10, OSP-0012-10

## Product Selection

**DT223URH-N**
**Compact Design**

### 240 Vac General-Duty, Non-Fusible, Compact Design, Double-Throw

| Ampere Rating Main and Standby | NEMA 3R Enclosure Rainproof Catalog Number | Ampere Rating Main and Standby | NEMA 3R Enclosure Rainproof Catalog Number |
|---|---|---|---|
| **Two-Pole—240 Vac** | | **Two-Pole, Three-Wire—240 Vac—Solid Neutral** | |
| 30 | **DT221URH** | 30 | **DT221URH-N** |
| 60 | **DT222URH** | 60 | **DT222URH-N** |
| 100 | **DT223URH** | 100 | **DT223URH-N** |

**DT224URK-NPS**

### 240 Vac General-Duty, Non-Fusible, Compact Design, Double-Throw

| Ampere Rating Main and Standby | Maximum Horsepower Ratings Single-Phase AC 240 V | 480 V | 600 V | Three-Phase AC 240 V | 480 V | 600 V | DC 250 V | NEMA 3R Enclosure Rainproof Catalog Number |
|---|---|---|---|---|---|---|---|---|
| **Two-Pole—240 Vac—250 Vdc** | | | | | | | | |
| 30 | 3 | — | — | — | — | — | 5 | **DT221URKPS** |
| 60 | 1 | — | — | — | — | — | 10 | **DT222URKPS** |
| 100 | 20 | — | — | — | — | — | 20 | **DT223URKPS** |
| 200 | 15 | — | — | — | — | — | 40 | **DT224URKPS** |
| 400 | — | — | — | — | — | — | 50 | **DT225URKPS** |
| **Two-Pole, Three-Wire—240 Vac—250 Vdc, Solid Neutral** | | | | | | | | |
| 30 | 3 | — | — | — | — | — | 5 | **DT221URK-NPS** |
| 60 | 10 | — | — | — | — | — | 10 | **DT222URK-NPS** |
| 100 | 20 | — | — | — | — | — | 20 | **DT223URK-NPS** |
| 200 | 15 | — | — | — | — | — | 40 | **DT224URK-NPS** |
| 400 | — | — | — | — | — | — | 50 | **DT225URK-NPS** |

1

## 240 Vac Heavy-Duty, Fusible, Double-Throw

| Ampere Rating Main and Standby | Fuse Class Provision | Maximum Horsepower Ratings with Time Delay Fuses Single-Phase AC 240 V | 480 V | 600 V | Three-Phase AC 240 V | 480 V | 600 V | DC 250 V | NEMA 1 Enclosure Indoor Catalog Number | NEMA 3R Enclosure Rainproof Catalog Number | NEMA 12/3R Enclosure Industrial, Dust-Tight Catalog Number | NEMA 4X Enclosure Corrosion-Resistant Stainless Steel Catalog Number |
|---|---|---|---|---|---|---|---|---|---|---|---|---|
| **Two-Pole—240 Vac—250 Vdc** | | | | | | | | | | | | |
| 200 | H or R | 15 | — | — | — | — | — | 40 | **DT224FGK** | **DT224FRK** | — | — |
| **Three-Pole—240 Vac—250 Vdc** | | | | | | | | | | | | |
| 30 | H or R | 3 | — | — | 7-1/2 | — | — | 5 | **DT321FGK** | **DT321FRK** | — | **DT321FWK** |
| 60 | H or R | 10 | — | — | 15 | — | — | 10 | **DT322FGK** | **DT322FRK** | — | **DT322FWK** |
| 100 | H or R | 15 | — | — | 30 | — | — | 20 | **DT323FGK** | **DT323FRK** | — | **DT323FWK** |
| 200 | H or R | 15 | — | — | 60 | — | — | 40 | **DT324FGK** | **DT324FRK** | — | **DT324FWK** |
| 400 | H or R | — | — | — | 125 | — | — | 50 | **DT325FGK** | **DT325FRK** | — | **DT325FWK** |
| 600 | J ② | — | — | — | 50 | — | — | 50 | **DT326FGK** ① | **DT326FRK** ① | — | — |
| 800 | L ② | — | — | — | — | — | — | — | **DT327FGK** ① | **DT327FRK** ① | — | — |
| 1200 | L ② | — | — | — | — | — | — | — | **DT328FGK** | **DT328FRK** | — | — |

***Notes***

① Available as one source 2 load application by adding "R" to the end of the catalog number.

② Stacked design-only requires three fuses.

UL listed switching neutral capability is available on three-pole and four-pole non-fusible double-throw switches with the installation of the proper bonding kit shown on **Page V2-T1-13**. See **Page V2-T1-15** for factory installation from the Flex Center.

DT363FGK

## 600 Vac Heavy-Duty, Fusible, Double-Throw

| Ampere Rating Main and Standby | Fuse Class Provision | Maximum Horsepower Ratings with Time Delay Fuses: Single-Phase AC 480 V | Single-Phase AC 600 V | Three-Phase AC 480 V | Three-Phase AC 600 V | DC 250 V | NEMA 1 Enclosure Indoor Catalog Number | NEMA 3R Enclosure Rainproof Catalog Number | NEMA 12/3R Enclosure Industrial, Dust-Tight Catalog Number | NEMA 4X Enclosure Corrosion-Resistant, Stainless Steel Catalog Number |
|---|---|---|---|---|---|---|---|---|---|---|
| **Three-Pole—600 Vac—250 Vdc** | | | | | | | | | | |
| 30 | H or R | 7-1/2 | 10 | 15 | 20 | — | **DT361FGK** | ③ | ③ | **DT361FWK** |
| 60 | H or R | 20 | 25 | 30 | 50 | — | **DT362FGK** | ③ | ③ | **DT362FWK** |
| 100 | H or R | 30 | 40 | 60 | 75 | — | **DT363FGK** | **DT363FRK** | ③ | **DT363FWK** |
| 200 | H or R | 50 | 50 | 125 | 150 | 40 | **DT364FGK** | **DT364FRK** | ③ | **DT364FWK** |
| 400 | T | — | — | 250 | 350 | 50 | **DT365FGK** | **DT365FRK** | — | **DT365FWK** |
| 600 | J ① | — | — | — | — | — | **DT366FGK** ② | **DT366FRK** ② | — | — |
| 800 | L ① | — | — | — | — | — | **DT367FGK** ② | **DT367FRK** ② | — | — |
| 1200 | L ① | — | — | — | — | — | **DT368FGK** | **DT368FRK** | — | — |

DT363URK

## 600 Vac Heavy-Duty, Non-Fusible, Double-Throw

| Ampere Rating Main and Standby | Maximum Horsepower Ratings: Single-Phase AC 480 V | Single-Phase AC 600 V | Three-Phase AC 480 V | Three-Phase AC 600 V | DC 250 V | NEMA 1 Enclosure Indoor Catalog Number | NEMA 3R Enclosure Rainproof Catalog Number | NEMA 12/3R Enclosure Industrial, Dust-Tight Catalog Number | NEMA 4X Enclosure Corrosion-Resistant, Stainless Steel Catalog Number |
|---|---|---|---|---|---|---|---|---|---|
| **Two-Pole—600 Vac—250 Vdc** | | | | | | | | | |
| 30 | 7-1/2 | 10 | — | — | 5 | **DT261UGK** | ③ | — | — |
| 60 | 20 | 25 | — | — | 10 | **DT262UGK** | ③ | — | — |
| 100 | 40 | 50 | — | — | 20 | **DT263UGK** | ③ | — | — |
| 200 | 50 | 50 | — | — | 40 | **DT264UGK** ④ | **DT264URK** ④ | — | — |
| 400 | — | — | — | — | 50 | **DT265UGK** | **DT265URK** | — | — |
| 600 | — | — | — | — | 50 | **DT266UGK** | **DT266URK** | — | — |
| 800 | — | — | — | — | 50 | **DT267UGK** | **DT267URK** | — | — |
| 1200 | — | — | — | — | 50 | **DT268UGK** | **DT268URK** | — | — |
| **Three-Pole—600 Vac—250 Vdc** | | | | | | | | | |
| 30 | 7-1/2 | 10 | 20 | 30 | 5 | **DT361UGK** | **DT361URK** | **DT361UDK** ⑤ | **DT361UWK** |
| 60 | 20 | 25 | 50 | 60 | 10 | **DT362UGK** | **DT362URK** | **DT362UDK** ⑤ | **DT362UWK** |
| 100 | 40 | 50 | 75 | 100 | 20 | **DT363UGK** | **DT363URK** | **DT363UDK** ⑤ | **DT363UWK** |
| 200 | 50 | 50 | 125 | 150 | 40 | **DT364UGK** | **DT364URK** | **DT364UDK** ⑤ | **DT364UWK** |
| 400 | — | — | 250 | 350 | 50 | **DT365UGK** | **DT365URK** | **DT365UDK** ⑤ | **DT365UWK** |
| 600 | — | — | 250 | 350 | 50 | **DT366UGK** | **DT366URK** | ③⑤ | ③ |
| 800 | — | — | 250 | 350 | 50 | **DT367UGK** | **DT367URK** | — | — |
| 1200 | — | — | 250 | 350 | 50 | **DT368UGK** | **DT368URK** | — | — |

***Notes***

① Stacked design-only requires three fuses.
② Available as one source 2 load application by adding "R" to the end of the catalog number.
③ Contact the Safety Switch Flex Center at FlexSwitches@eaton.com for availability of this product.
④ Rated 600 Vdc, 50 hp in addition to ratings shown in table.
⑤ NEMA 12/3R enclosures (30–1200 A) can be field modified to meet NEMA 3R rainproof requirements when a factory provided drain hole is opened.

UL listed switching neutral capability is available on three-pole and four-pole non-fusible double-throw switches with the installation of the proper bonding kit shown on **Page V2-T1-13**. See **Page V2-T1-15** for factory installation from the Flex Center.

1

DT363URK

## 600 Vac Heavy-Duty, Non-Fusible, Double-Throw

| Ampere Rating Main and Standby | Maximum Horsepower Ratings Single-Phase AC 480 V | Single-Phase AC 600 V | Three-Phase AC 480 V | Three-Phase AC 600 V | DC 250 V | NEMA 1 Enclosure Indoor Catalog Number | NEMA 3R Enclosure Rainproof Catalog Number | NEMA 12/3R Enclosure Industrial, Dust-Tight Catalog Number | NEMA 4X Enclosure Corrosion-Resistant, Stainless Steel Catalog Number |
|---|---|---|---|---|---|---|---|---|---|
| **Four-Pole—600 Vac—250 Vdc** ① | | | | | | | | | |
| 30 | 7-1/2 | 10 | 20 | 30 | 5 | ② | **DT461URK** | ② | ② |
| 60 | 20 | 25 | 50 | 60 | 10 | ② | **DT462URK** | ② | ② |
| 100 | 40 | 50 | 75 | 100 | 20 | ② | **DT463URK** | ② | ② |
| 200 | — | 50 | 125 | 150 | 40 | **DT464UGK** | **DT464URK** | ② | ② |
| 400 | — | — | 250 | 350 | 50 | **DT465UGK** | **DT465URK** | ② | ② |
| 600 | — | — | 250 | 350 | 50 | **DT466UGK** | **DT466URK** | ② | ② |
| 800 | — | — | 250 | 350 | 50 | **DT467UGK** | **DT467URK** | ② | ② |
| **Six-Pole—600 Vac—250 Vdc** ① | | | | | | | | | |
| 30 | 7-1/2 | 10 | 15 | 30 | 5 | ② | **DT661URK** | ② | ② |
| 60 | 20 | 25 | 50 | 60 | 10 | ② | **DT662URK** | ② | ② |
| 100 | 40 | 50 | 75 | 100 | 20 | ② | **DT663URK** | ② | ② |

***Notes***

① **Field installable neutral kit is not available. If a neutral is required, order the catalog number shown in the table with "N" suffix.**

② Contact the Safety Switch Flex Center at FlexSwitches@eaton.com for availability of this product.

UL listed switching neutral capability is available on three-pole and four-pole non-fusible double-throw switches with the installation of the proper bonding kit shown on **Page V2-T1-13**. See **Page V2-T1-15** for factory installation from the Flex Center.

## Technical Data and Specifications

### Typical Fusible, Double-Throw Schematic Diagram

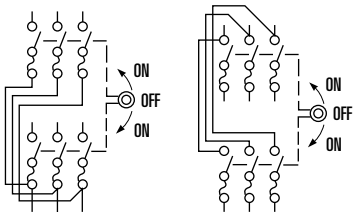


**Fusible Three-Pole Two Sources** **Fusible Three-Pole Two Loads**

### Typical Non-Fusible, Double-Throw Schematic Diagram

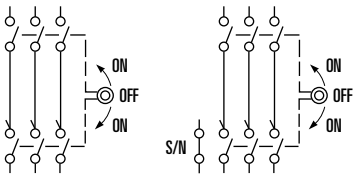


**Non-Fusible Three-Pole Two Sources or Two Loads** **Non-Fusible Three-Pole Two Sources or Two Loads**

### Typical General-Duty, Double-Throw Schematic Diagrams (with and without factory-installed neutral)

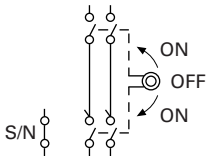


**Two Sources**

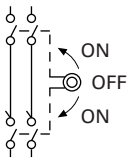


### Short-Circuit Ratings Using Class "R", "J", "L" or "T" Fusing Where Applicable

| Ampere Rating | Voltage Ratings Type 1 | Type 3R | Type 12/3R | Type 4 and 4X |
|---|---|---|---|---|
| 30 | 100k at 600 | 100k at 600 | 100k at 600 | 100k at 600 |
| 60 | 100k at 600 | 100k at 600 | 100k at 600 | 100k at 600 |
| 100 | 100k at 600 | 100k at 600 | 100k at 600 | 100k at 600 |
| 200 | 100k at 600 | 100k at 600 | 100k at 600 | 100k at 600 |
| 400 | 100k at 600 | 100k at 600 | 100k at 600 | 100k at 600 |
| 600 | 100k at 600 | 100k at 600 | 100k at 600 | 100k at 600 |
| 800 | 100k at 600 | 100k at 600 | — | — |
| 1200 | 100k at 600 | 100k at 600 | — | — |

## Dimensions

Approximate Dimensions in Inches (mm)

### General-Duty, Non-Fusible, 240 V, Two-Pole Solid Neutral, Double-Throw, Compact Design

| Ampere Rating | Height (H) | Width (W) | Depth (D) | Depth (D2) | Weight Lb (kg) |
|---|---|---|---|---|---|
| **NEMA 3R** | | | | | |
| 30 | 14.69 (373.1) | 9.63 (244.6) | 10.81 (274.6) | 5.23 (132.8) | 12 (5.5) |
| 60 | 14.69 (373.1) | 9.63 (244.6) | 10.81 (274.6) | 5.23 (132.8) | 12 (5.5) |
| 100 | 14.69 (373.1) | 9.63 (244.6) | 10.81 (274.6) | 5.23 (132.8) | 12 (5.5) |

### General-Duty, Non-Fusible, 240 V, Two-Pole Solid Neutral, Double-Throw, Quick-Make, Quick-Break Design

| Ampere Rating | Height (H) | Width (W) | Depth (D) | Depth (D2) | Weight Lb (kg) |
|---|---|---|---|---|---|
| **NEMA 3R** | | | | | |
| 30 | 24.63 (625.6) | 11.94 (303.3) | 9.88 (251.0) | 5.38 (136.7) | 34 (15.4) |
| 60 | 24.63 (625.6) | 11.94 (303.3) | 9.88 (251.0) | 5.38 (136.7) | 34 (15.4 |
| 100 | 24.63 (625.6) | 11.94 (303.3) | 9.88 (251.0) | 5.38 (136.7) | 34 (15.4) |
| 200 | 37.38 (949.5) | 19.56 (496.8) | 11.25 (285.8) | 6.10 (154.9) | 80 (36.3) |
| 400 | 53.81 (1366.8) | 23.13 (587.5) | 12.50 (317.6) | 8.88 (225.6) | 140 (63.6) |

### NEMA 3R, 30–400 A, General-Duty, Non-Fusible, Double-Throw

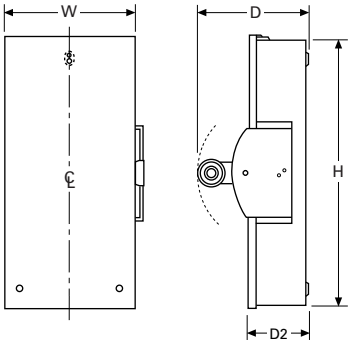


***Notes***

Class "H" fuse clips supplied as standard for 30–400 A except Class "T" for 400 A at 600 V. Rated at 10,000 rms symmetrical when using Class "H" fuses.

Table is not applicable to the compact design shown on **Page V2-T1-49**. The compact design is suitable for use on a circuit capable of delivering not more than 10,000 rms symmetrical amperes.

Class "R" fuse adapter kits are shown on **Page V2-T1-13**. Individual adapter kits are applicable as shown on **Page V2-T1-13** and yield the short-circuit ratings per the tables above when Class "R" fuses are installed. When installed, Class "R" fuse adapter kits reject all fuses except Class "R."

Class "J" fuse provisions can be obtained on most 60–400 A safety switches by moving the fuse base to a new position as instructed by the device publication label. Class "J" fuse adapter kits, where needed, are shown on **Page V2-T1-13** and yield the short-circuit ratings per the tables above when Class "J" fuses are installed. Class "J" fuse provisions must be factory installed on 30 A heavy-duty switches. Catalog numbers are shown in table on **Page V2-T1-15**. Class "J" fusing is not applicable on 30–200 A general-duty switches, 30–100 A double-throw switches, and any switch higher than 600 A.

Class "T" fuse adapter kits are shown on **Page V2-T1-13**. Individual adapter kits are applicable to 200–800 A switches as shown on **Page V2-T1-13** and yield the short-circuit ratings per the tables to the left when Class "T" fuses are installed. On 1200 A switches, Class "T" fuse provisions can be obtained by moving the fuse base to a new position as instructed by the device publication label.

1

Approximate Dimensions in Inches (mm)

## Heavy-Duty, Non-Fusible, 240 V and 600 V, Three-Pole, Double-Throw

| Ampere Rating | Width (W) | Height (H) | Depth (D) | Depth (D2) | Weight Lb (kg) |
|---|---|---|---|---|---|
| **NEMA 1, 3R** | | | | | |
| 30 | 11.94 (303.3) | 24.63 (625.6) | 9.88 (251.0) | 5.38 (136.7) | 34 (15.436) |
| 60 | 11.94 (303.3) | 24.63 (625.6) | 9.88 (251.0) | 5.38 (136.7) | 34 (15.436) |
| 100 | 11.94 (303.3) | 24.63 (625.6) | 9.88 (251.0) | 5.38 (136.7) | 34 (15.436) |
| 200 | 19.56 (496.8) | 37.38 (949.5) | 11.25 (285.8) | 6.10 (154.9) | 80 (36.32) |
| 400 | 23.13 (587.5) | 53.81 (1366.8) | 12.50 (317.5) | 7.25 (184.2) | 140 (63.56) |
| 600 | 27.44 (697.0) | 63.31 (1608.1) | 14.13 (358.9) | 8.88 (225.6) | 175 (79.45) |
| 800 | 27.44 (697.0) | 63.31 (1608.1) | 14.13 (358.9) | 8.88 (225.6) | 175 (79.45) |
| 1200 | 42.62 (1082.5) | 78.11 (1984.0) | 29.62 (752.3) | 20.47 (519.9) | 473 (214.6) |
| **NEMA 12/3R, 4X Stainless Steel** | | | | | |
| 30 | 12.00 (304.8) | 25.88 (657.4) | 10.25 (260.4) | 5.50 (139.7) | 60 (27.24) |
| 60 | 12.00 (304.8) | 25.88 (657.4) | 10.25 (260.4) | 5.50 (139.7) | 60 (27.24) |
| 100 | 12.00 (304.8) | 25.88 (657.4) | 10.25 (260.4) | 5.50 (139.7) | 60 (27.24) |
| 200 | 19.50 (495.3) | 41.00 (1041.4) | 11.63 (295.4) | 6.48 (164.6) | 105 (47.67) |
| 400 | 23.00 (584.2) | 57.50 (1460.5) | 12.50 (317.5) | 7.25 (184.2) | 185 (83.99) |

## Heavy-Duty, Fusible, 240 V and 600 V, Three-Pole, Double-Throw

| Ampere Rating | Width (W) | Height (H) | Depth (D) | Depth (D2) | Weight Lb (kg) |
|---|---|---|---|---|---|
| **NEMA 1, 3R** | | | | | |
| 30 | 11.94 (303.3) | 36.63 (930.4) | 9.88 (251.0) | 5.38 (136.7) | 44 (19.976) |
| 60 | 11.94 (303.3) | 36.63 (930.4) | 9.88 (251.0) | 5.38 (136.7) | 44 (19.976) |
| 100 | 11.94 (303.3) | 36.63 (930.4) | 9.88 (251.0) | 5.38 (136.7) | 44 (19.976) |
| 200 | 19.56 (496.8) | 50.88 (1292.4) | 11.25 (285.8) | 6.10 (154.9) | 95 (43.13) |
| 400 | 25.38 (644.7) | 74.75 (1898.7) | 14.13 (358.9) | 8.88 (225.6) | 230 (104.42) |
| 600 | 28.12 (714.3) | 58.86 (1495.0) | 25.62 (650.7) | 20.47 (520.0) | 282 (127.9) |
| 800 | 28.12 (714.2) | 58.86 (1495.0) | 25.62 (650.7) | 20.47 (519.9) | 282 (127.9) |
| 1200 | 42.62 (1082.5) | 78.11 (1984.0) | 29.62 (752.3) | 20.47 (519.9) | 509 (230.9) |
| **NEMA 12/3R, 4X Stainless Steel** | | | | | |
| 30 | 12.00 (304.8) | 39.81 (1011.2) | 10.25 (260.4) | 5.50 (139.7) | 45 (20.43) |
| 60 | 12.00 (304.8) | 39.81 (1011.2) | 10.25 (260.4) | 5.50 (139.7) | 45 (20.43) |
| 100 | 12.00 (304.8) | 39.81 (1011.2) | 10.25 (260.4) | 5.50 (139.7) | 45 (20.43) |
| 200 | 19.56 (496.8) | 55.63 (1413.0) | 11.63 (295.4) | 6.46 (164.1) | 100 (45.4) |
| 400 | 25.38 (644.7) | 74.75 (1898.7) | 14.13 (358.9) | 8.92 (226.6) | 260 (118.04) |

## NEMA 1, 3R Double-Throw 30–1200 A

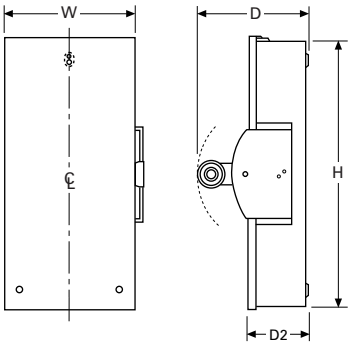


## NEMA 12/3R, 4X Double-Throw 30–400 A

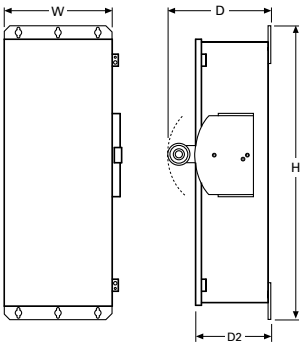

EnviroLine Stainless Steel Switch

## Contents


| *Description* | *Page* |
|---|---|
| Product Overview | **V2-T1-2** |
| General-Duty | **V2-T1-25** |
| Heavy-Duty | **V2-T1-30** |
| Heavy-Duty Double-Door Safety Switch | **V2-T1-41** |
| Six-Pole Switches | **V2-T1-45** |
| Double-Throw Switches | **V2-T1-48** |
| EnviroLine Stainless Steel Switch | |
| Product Selection | **V2-T1-56** |
| Dimensions | **V2-T1-58** |
| Window Switches | **V2-T1-59** |
| Receptacle Switches | **V2-T1-62** |
| Non-Metallic KRYDON Switch | **V2-T1-64** |
| Shunt Trip Safety Switch | **V2-T1-67** |
| NEMA 7/9—Hazardous Location Disconnect Switch | **V2-T1-70** |
| Quick-Connect Switches | **V2-T1-72** |
| DC Disconnect Switches | **V2-T1-77** |
| Mill-Duty Rated, Heavy-Duty Safety Switch | **V2-T1-86** |
| Elevator Control Switch | **V2-T1-88** |
| Auxiliary Power Heavy-Duty Safety Switch | **V2-T1-91** |
| Left-Handed Safety Switch | **V2-T1-95** |
| Heavy-Duty Surge Switch | **V2-T1-96** |
| EZ Isolator™ (OLI) Switch | **V2-T1-98** |
| Pringle Bolted Pressure Switch | **V2-T1-101** |
| Type DS, Fusible and Non-Fusible | **V2-T1-104** |
| Type Visi-Flex DE-ION | **V2-T1-107** |
| Flange Mounted—Variable Depth | **V2-T1-111** |
| Flange Mounted—Fixed Depth | **V2-T1-115** |


## EnviroLine Stainless Steel Switch

### Product Description

These switches are primarily for use in the meat packing and food processing industries or any application where water is frequently used to hose down equipment. In addition to the stainless steel NEMA 4X enclosure, the interior mechanism, backpan and springs are stainless steel. Ratings for these heavy-duty switches are 30–400 A, 240–600 Vac, available as fusible and non-fusible switches.

### Features

- Stainless steel enclosure (304 Grade)
- Stainless steel mechanism (304 Grade)
- 30–400 A
- Horsepower rated
- Suitable for service entrance use
- Stainless steel back pan (304 Grade)
- Stainless steel springs (304 Grade)

### Standards and Certifications

- Upper and lower window UL 98 listed and NEMA KS-1 approved
- UL 98
- UL listed File No. E5239

Listed

1

## Product Selection

**DH321NWKX**

### 240 Vac Heavy-Duty, Fusible, Single-Throw Stainless Steel Enclosure and Operating Mechanism

| System | Ampere Rating | Fuse Class Provision | Maximum Horsepower Ratings with Time Delay Fuses AC Standard Fuse Single-Phase | Three-Phase | Time Delay Single-Phase | Three-Phase | DC 250 V | NEMA 4X Enclosure Corrosion-Resistant, Stainless Steel Catalog Number |
|---|---|---|---|---|---|---|---|---|
| **Three-Wire (Two Blades, Two Fuses, S/N), 240 Vac—250 Vdc** | | | | | | | | |
| 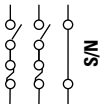 | 30 | H or R | 1-1/2 | 3 | 3 | 7-1/2 | 5 | **DH221NWKX** ① |
| | 60 | H or R | 3 | 7-1/2 | 10 | 15 | 10 | **DH222NWKX** |
| | 100 | H or R | 7-1/2 | 15 | 15 | 30 | 20 | **DH223NWKX** |
| | 200 | H or R | 15 | 25 | 15 | 60 | 40 | **DH224NWKX** |
| | 400 | H or R | — | 50 | — | 125 | 50 | **DH225NWKX** |
| **Three-Pole, 240 Vac—250 Vdc (Suitable for Service Entrance Use with a Neutral Kit Installed)** | | | | | | | | |
| 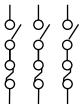 | 30 | H or R | 1-1/2 | 3 | — | 7-1/2 | — | **DH321FWKX** ① |
| | 60 | H or R | 3 | 7-1/2 | — | 15 | — | **DH322FWKX** |
| | 100 | H or R | — | — | — | — | — | ② |
| | 200 | H or R | 15 | 25 | — | 60 | 40 | **DH324FWKX** |
| | 400 | H or R | — | 50 | — | 125 | 50 | **DH325FWKX** |
| **Four-Wire (Three Blades, Three Fuses, S/N), 240 Vac—250 Vdc** | | | | | | | | |
| 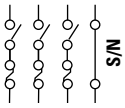 | 30 | H or R | — | 3 | — | 7-1/2 | — | **DH321NWKX** ① |
| | 60 | H or R | — | 7-1/2 | — | 15 | — | **DH322NWKX** |
| | 100 | H or R | — | 15 | — | 30 | 20 | **DH323NWKX** |
| | 200 | H or R | — | 25 | — | 60 | — | **DH324NWKX** |
| | 400 | H or R | — | 50 | — | 125 | 50 | **DH325NWKX** |

***Notes***

① 30 A heavy-duty switches with Type J fuse provisions are available from the factory only.

② Contact the Safety Switch Flex Center at FlexSwitches@eaton.com for availability of this product.

See **Page V2-T1-38** for dimensions.

DH361UWKX

## 600 Vac Heavy-Duty, Fusible 277/480 V, Single-Throw Stainless Steel Enclosure and Operating Mechanism

| System | Ampere Rating | Fuse Class Provision | Maximum Horsepower Ratings with Time Delay Fuses: Single-Phase AC 480 V | Single-Phase AC 600 V | Three-Phase AC 480 V | Three-Phase AC 600 V | DC 250 V | DC 600 V | NEMA 4X Enclosure Corrosion-Resistant, Stainless Steel Catalog Number |
|---|---|---|---|---|---|---|---|---|---|
| **Two-Pole, 480 Vac—600 Vac or Vdc ① (Suitable for Service Entrance Use with a Neutral Kit Installed)** | | | | | | | | | |
| 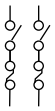 | 30 | H or R | 7-1/2 | 10 | — | — | — | 15 | **DH261FWKX ②** |
| | 60 | H or R | — | — | — | — | — | — | ③ |
| | 100 | H or R | — | — | — | — | — | — | ③ |
| | 200 | H or R | 50 | 50 | — | — | — | 50 | **DH264FWKX** |
| | 400 | H or R | — | — | — | — | — | — | ③ |
| **Three-Pole, 480 Vac—600 Vac, 250 Vdc (Suitable for Service Entrance Use with a Neutral Kit Installed)** | | | | | | | | | |
| 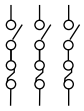 | 30 | H or R | 7-1/2 | 10 | 15 | 20 | — | — | **DH361FWKX ②** |
| | 60 | H or R | 20 | 25 | 30 | 50 | — | — | **DH362FWKX** |
| | 100 | H or R | 30 | 30 | 60 | 75 | — | — | **DH363FWKX** |
| | 200 | H or R | 50 | 50 | 125 | 150 | — | — | **DH364FWKX** |
| | 400 | H or R | — | — | 250 | 350 | — | — | **DH365FWKX** |
| **Four-Wire (Three Blades, Three Fuses, S/N) 480 Vac—600 Vac, 250 Vdc** | | | | | | | | | |
| 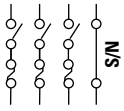  | 30 | H or R | 7-1/2 | 10 | 20 | 30 | — | — | **DH361NWKX ②** |
| | 60 | H or R | 20 | 25 | 50 | 60 | — | — | **DH362NWKX** |
| | 100 | H or R | 40 | 50 | 75 | 100 | — | — | **DH363NWKX** |
| | 200 | H or R | 50 | 50 | 125 | 150 | — | — | **DH364NWKX** |
| | 400 | H or R | — | — | 250 | 350 | — | — | **DH365NWKX** |

## 600 Vac Heavy-Duty, Non-Fusible 277/480 V, Single-Throw Stainless Steel Enclosure and Operating Mechanism

| System | Ampere Rating | Maximum Horsepower Ratings: Single-Phase AC 480 V | Single-Phase AC 600 V | Three-Phase AC 480 V | Three-Phase AC 600 V | DC 250 V | DC 600 V | NEMA 4X Enclosure Corrosion-Resistant, Stainless Steel Catalog Number |
|---|---|---|---|---|---|---|---|---|
| **Three-Pole, 480 Vac—600 Vac, 250 Vdc (Suitable for Service Entrance Use with a Neutral Kit Installed)** | | | | | | | | |
| | 30 | 7-1/2 | 10 | 20 | 30 | 5 | — | **DH361UWKX** |
| | 60 | 20 | 25 | 50 | 60 | 10 | — | **DH362UWKX** |
| | 100 | 40 | 50 | 75 | 100 | 20 | — | **DH363UWKX** |
| | 200 | 50 | 50 | 125 | 150 | 40 | — | **DH364UWKX** |
| | 400 | — | — | 250 | 350 | 50 | — | **DH365UWKX** |

***Notes***

① DC rating for 400 A switches is 250 V.

② 30 A heavy-duty switches with Type J fuse provisions are available from the factory only.

③ Contact the Safety Switch Flex Center at FlexSwitches@eaton.com for availability of this product.

See **Page V2-T1-38** for dimensions.

1

## Dimensions

Approximate Dimensions in Inches (mm)

### Heavy-Duty, Non-Fusible, 600 V, Three-Pole, Single-Throw

| Ampere Rating | Width (W) | Height (H) | Depth (D) | Depth (D2) | Weight Lb (kg) |
|---|---|---|---|---|---|
| **4X Stainless Steel** | | | | | |
| 30 | 8.13 (206.5) | 12.13 (308.1) | 10.00 (254.0) | 5.50 (139.7) | 17 (7.718) |
| 60 | 8.13 (206.5) | 12.13 (308.1) | 10.00 (254.0) | 5.50 (139.7) | 17 (7.718) |
| 100 | 11.13 (282.7) | 24.00 (609.6) | 10.25 (260.4) | 5.50 (139.7) | 28 (12.712) |
| 200 | 16.00 (406.4) | 34.38 (873.3) | 11.50 (292.1) | 6.44 (163.6) | 55 (24.97) |
| 400 | 23.00 (584.2) | 57.63 (1463.8) | 12.63 (320.8) | 7.19 (182.6) | 125 (56.75) |

### Heavy-Duty, Fusible, 240 V and 600 V, Three-Pole Solid Neutral, Single-Throw

| Ampere Rating | Width (W) | Height (H) | Depth (D) | Depth (D2) | Weight Lb (kg) |
|---|---|---|---|---|---|
| **4X Stainless Steel** | | | | | |
| 30 | 8.13 (206.5) | 17.88 (454.2) | 10.00 (254.0) | 5.50 (139.7) | 22 (9.988) |
| 60 | 8.13 (206.5) | 17.88 (454.2) | 10.00 (254.0) | 5.50 (139.7) | 22 (9.988) |
| 100 | 11.13 (282.7) | 24.00 (609.6) | 10.25 (260.4) | 5.50 (139.7) | 30 (13.62) |
| 200 | 16.00 (406.4) | 34.38 (873.3) | 11.50 (292.1) | 6.44 (163.6) | 61 (27.694) |
| 400 | 23.00 (584.2) | 57.63 (1463.8) | 12.63 (320.8) | 7.19 (182.6) | 135 (61.29) |

### NEMA 4X Heavy-Duty 30–400 A

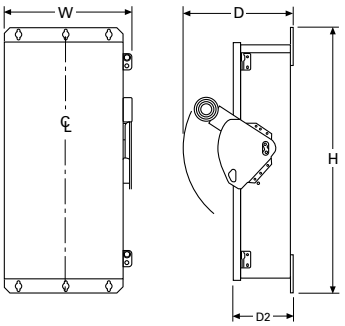


**Note:** A factory-installed ground lug is supplied in all heavy-duty safety switches.

Window Switch

## Contents


| *Description* | *Page* |
|---|---|
| Product Overview | **V2-T1-2** |
| General-Duty | **V2-T1-25** |
| Heavy-Duty | **V2-T1-30** |
| Heavy-Duty Double-Door Safety Switch | **V2-T1-41** |
| Six-Pole Switches | **V2-T1-45** |
| Double-Throw Switches | **V2-T1-48** |
| EnviroLine Stainless Steel Switch | **V2-T1-55** |
| Window Switches | |
| Product Selection | **V2-T1-60** |
| Dimensions | **V2-T1-61** |
| Receptacle Switches | **V2-T1-62** |
| Non-Metallic KRYDON Switch | **V2-T1-64** |
| Shunt Trip Safety Switch | **V2-T1-67** |
| NEMA 7/9—Hazardous Location Disconnect Switch | **V2-T1-70** |
| Quick-Connect Switches | **V2-T1-72** |
| DC Disconnect Switches | **V2-T1-77** |
| Mill-Duty Rated, Heavy-Duty Safety Switch | **V2-T1-86** |
| Elevator Control Switch | **V2-T1-88** |
| Auxiliary Power Heavy-Duty Safety Switch | **V2-T1-91** |
| Left-Handed Safety Switch | **V2-T1-95** |
| Heavy-Duty Surge Switch | **V2-T1-96** |
| EZ Isolator™ (OLI) Switch | **V2-T1-98** |
| Pringle Bolted Pressure Switch | **V2-T1-101** |
| Type DS, Fusible and Non-Fusible | **V2-T1-104** |
| Type Visi-Flex DE-ION | **V2-T1-107** |
| Flange Mounted—Variable Depth | **V2-T1-111** |
| Flange Mounted—Fixed Depth | **V2-T1-115** |


## Window Switches

### Product Description

All window switches integrate an external viewing window with the enhanced visible blade feature. This allows users to easily view the trailing edge of the blades to confirm disconnect is open while the switch is in the OFF position.

### Features

- 30–1200 A
- Blade visibility when door closed
- Suitable for service entrance use
- NEMA 12/3R, 4 and 4X stainless steel enclosures
- Window material is high-quality laminated safety glass
- External viewing window design is field replaceable—kits available for switches 30–1200 A
- 30 A and 60 A heavy-duty safety switches feature a vertical viewing window
- 100–1200 A heavy-duty safety switches feature a horizontal viewing window(s)
- Ratings are 30–1200 A, 240–600 Vac, fusible and non-fusible. Available in NEMA 12/3R, 4X stainless steel enclosures

### Standards and Certifications

- Upper and lower window UL listed and NEMA KS-1 approved
- UL 98
- UL listed File No. E5239

Listed

#### *Seismic Qualifications*

- Heavy-duty switches exceed the requirements of Uniform Building Code (UBC) and California Code Title 24 OSP-0011-10, OSP-0012-10

1

## Product Selection

DH361FDKW

### 240 Vac Heavy-Duty, Fusible Single-Throw with Upper Viewing Window

| System | Ampere Rating | Fuse Class Provision | Maximum Horsepower Ratings with Time Delay Fuses AC Standard Fuse Single-Phase | Standard Fuse Three-Phase | Time Delay Single-Phase | Time Delay Three-Phase | DC 250 V | NEMA 12/3R Enclosure Industrial, Dust-Tight Catalog Number | NEMA 4 Enclosure Watertight, Painted Steel Catalog Number | NEMA 4X Enclosure Corrosion-Resistant, Stainless Steel Catalog Number |
|---|---|---|---|---|---|---|---|---|---|---|
| **Four-Wire (Three Blades, Three Fuses, S/N), 240 Vac—250 Vdc ①** | | | | | | | | | | |
| 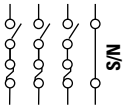 | 30 | H or R | — | 3 | — | 7-1/2 | — | DH321NDKW ②③ | — | DH321NWKW ③ |
| | 60 | H or R | — | 7-1/2 | — | 15 | — | DH322NDKW ② | — | DH322NWKW |
| | 100 | H or R | — | 15 | — | 30 | 20 | DH323NDKW ② | — | DH323NWKW |
| | 200 | H or R | — | 25 | — | 60 | — | DH324NDKW ② | — | DH324NWKW |
| | 400 | H or R | — | 50 | — | 125 | 50 | DH325NDKW ② | DH325NPKW | DH325NWKW |
| | 600 | H or R | — | 75 | — | 200 | — | DH326NDKW ② | DH326NPKW | DH326NWKW |
| | 800 | L | — | 100 | — | 250 | — | DH327NDKW ② | DH327NPKW | DH327NWKW |

### 600 Vac Heavy-Duty, Fusible Single-Throw with Upper Viewing Window

| System | Ampere Rating | Fuse Class Provision | Maximum Horsepower Ratings with Time Delay Fuses Single-Phase AC 480 V | Single-Phase AC 600 V | Three-Phase AC 480 V | Three-Phase AC 600 V | DC 250 V 600 V | NEMA 12/3R Enclosure Industrial, Dust-Tight Catalog Number | NEMA 4 Enclosure Watertight, Painted Steel Catalog Number | NEMA 4X Enclosure Corrosion-Resistant, Stainless Steel Catalog Number |
|---|---|---|---|---|---|---|---|---|---|---|
| **Four-Wire (Three Blades, Three Fuses, S/N), 600 Vac—250 Vdc ①** | | | | | | | | | | |
| 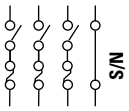 | 30 | H or R | 7-1/2 | 10 | 15 | 20 | — | DH361NDKW ②③ | — | DH361NWKW ③ |
| | 60 | H or R | 20 | 25 | 30 | 50 | — | DH362NDKW ② | — | DH362NWKW |
| | 100 | H or R | 30 | 40 | 60 | 75 | — | DH363NDKW ② | — | DH363NWKW |
| | 200 | H or R | 50 | 50 | 125 | 150 | — | DH364NDKW ② | — | DH364NWKW |
| | 400 | H or R | — | — | 250 | 350 | — | DH365NDKW ② | DH365NPKW | DH365NWKW |
| | 600 | H or R | — | — | 400 | 500 | — | DH366NDKW ② | DH366NPKW | DH366NWKW |
| | 800 | L | — | — | 500 | 500 | — | DH367NDKW ② | DH367NPKW | DH367NWKW |
| | 1200 | L | — | — | 500 | 500 | — | DH368NDKW ④ | — | DH368NWKW ④ |

DH363FWKW

### 600 Vac Heavy-Duty, Non-Fusible Single-Throw with Upper Viewing Window

| System | Ampere Rating | Fuse Class Provision | Maximum Horsepower Ratings with Time Delay Fuses Single-Phase AC 480 V | Single-Phase AC 600 V | Three-Phase AC 480 V | Three-Phase AC 600 V | DC 250 V 600 V | NEMA 12/3R Enclosure Industrial, Dust-Tight Catalog Number | NEMA 4 Enclosure Watertight, Painted Steel Catalog Number | NEMA 4X Enclosure Corrosion-Resistant, Stainless Steel Catalog Number |
|---|---|---|---|---|---|---|---|---|---|---|
| **Three-Pole—600 Vac, 250 Vdc ① (Suitable for Service Entrance Use with a Neutral Kit Installed)** | | | | | | | | | | |
| | 30 | 7-1/2 | 10 | 20 | 30 | 5 | — | DH361UDKW ② | — | DH361UWKW |
| | 60 | 20 | 25 | 50 | 60 | 10 | — | DH362UDKW ② | — | DH362UWKW |
| | 100 | 40 | 50 | 75 | 100 | 20 | — | DH363UDKW ② | — | DH363UWKW |
| | 200 | 50 | 50 | 125 | 150 | 40 | — | DH364UDKW ② | — | DH364UWKW |
| | 400 | — | — | 250 | 350 | 50 | — | DH365UDKW ② | DH365UPKW | DH365UWKW |
| | 600 | — | — | 400 | 500 | — | — | DH366UDKW ② | DH366UPKW | DH366UWKW |
| | 800 | — | — | 500 | 500 | — | — | DH367UDKW ② | DH367UPKW | DH367UWKW |
| | 1200 | — | — | 500 | 500 | — | — | DH368UDKW ④ | — | DH368UWKW ④ |

***Notes***

① For two-pole applications, use outside poles of three-pole switch.
② NEMA 12/3R enclosures (30–1200 A) can be field modified to meet NEMA 3R rainproof requirements when a factory provided drain hole is opened.
③ 30 A heavy-duty switches with Type J fuse provisions are available from the factory only.
④ NOT suitable for use as service entrance per NEC 215.10 and 230.95.

## 240 Vac Heavy-Duty, Fusible, Single-Throw with Lower Viewing Window ①

| System | Ampere Rating | Fuse Class Provision | Maximum Horsepower Ratings with Time Delay Fuses AC Standard Fuse Single-Phase | Standard Fuse Three-Phase | Time Delay Single-Phase | Time Delay Three-Phase | DC 250 V | NEMA 12/3R Enclosure Industrial, Dust-Tight Catalog Number | NEMA 4 Enclosure Watertight, Painted Steel Catalog Number | NEMA 4X Enclosure Corrosion-Resistant, Stainless Steel Catalog Number |
|---|---|---|---|---|---|---|---|---|---|---|
| **Four-Wire (Three Blades, Three Fuses, S/N), 240 Vac—250 Vdc ②** | | | | | | | | | | |
| 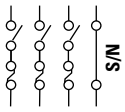 | 200 | H or R | — | 25 | — | 60 | — | DH324NDKLW ③ | — | DH324NWKLW |
| | 400 | H or R | — | 50 | — | 125 | 50 | DH325NDKLW ③ | DH325NPKLW | DH325NWKLW |
| | 600 | H or R | — | 75 | — | 200 | — | DH326NDKLW ③ | DH326NPKLW | DH326NWKLW |
| | 800 | L | — | 100 | — | 250 | — | DH327NDKLW ③ | DH327NPKLW | DH327NWKLW |
| | 1200 | L | — | — | — | — | — | DH328NDKLW ③ | DH328NPKLW | DH328NWKLW |

## 600 Vac Heavy-Duty, Fusible, Single-Throw with Lower Viewing Window ①

| System | Ampere Rating | Fuse Class Provision | Maximum Horsepower Ratings with Time Delay Fuses Single-Phase AC 480 V | Single-Phase AC 600 V | Three-Phase AC 480 V | Three-Phase AC 600 V | DC 250 V | NEMA 12/3R Enclosure Industrial, Dust-Tight Catalog Number | NEMA 4 Enclosure Watertight, Painted Steel Catalog Number | NEMA 4X Enclosure Corrosion-Resistant, Stainless Steel Catalog Number |
|---|---|---|---|---|---|---|---|---|---|---|
| **Four-Wire (Three Blades, Three Fuses, S/N), 600 Vac—250 Vdc ②** | | | | | | | | | | |
| 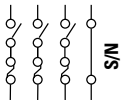 | 200 | H or R | 50 | 50 | 125 | 150 | — | DH364NDKLW ③ | — | DH364NWKLW |
| | 400 | H or R | — | — | 250 | 350 | — | DH365NDKLW ③ | DH365NPKLW | DH365NWKLW |
| | 600 | H or R | — | — | 400 | 500 | — | DH366NDKLW ③ | DH366NPKLW | DH366NWKLW |
| | 800 | L | — | — | 500 | 500 | — | DH367NDKLW ③ | DH367NPKLW | DH367NWKLW |
| | 1200 | L | — | — | 500 | 500 | — | DH368NDKLW ③④ | DH368NPKLW ④ | DH368NWKLW ④ |

## Dimensions

Approximate Dimensions in Inches (mm)

***Heavy-Duty, Fusible and Non-Fusible with Window***

### Heavy-Duty, Non-Fusible, 600 V, Three-Pole, Single-Throw

| Ampere Rating | Width (W) | Height (H) | Depth (D) | Depth (D2) | Weight Lb (kg) |
|---|---|---|---|---|---|
| **NEMA 12/3R, 4, 4X Stainless Steel** | | | | | |
| 30 | 8.76 (222.5) | 19.08 (484.6) | 10.22 (259.6) | 5.50 (139.7) | 22 (9.988) |
| 60 | 8.76 (222.5) | 19.08 (484.6) | 10.22 (259.6) | 5.50 (139.7) | 22 (9.988) |
| 100 | 11.79 (299.5) | 24.95 (633.7) | 10.22 (259.6) | 5.50 (139.7) | 30 (13.62) |
| 200 | 16.95 (430.5) | 35.38 (898.7) | 11.63 (295.4) | 6.44 (163.6) | 61 (27.694) |
| 400 | 24.12 (612.6) | 57.47 (1459.7) | 12.43 (315.7) | 7.19 (182.6) | 135 (61.29) |
| 600 | 25.01 (635.3) | 62.97 (1599.4) | 12.79 (324.9) | 8.95 (227.3) | 203 (92.162) |
| 800 | 26.35 (669.3) | 71.72 (1821.7) | 12.79 (324.9) | 8.95 (227.3) | 213 (96.702) |
| 1200 | 43.11 (1095.0) | 73.77 (1873.8) | 17.15 (435.6) | 12.45 (316.2) | 510 (231.54) |

### NEMA 12/3R, 4, 4X Heavy-Duty 30–1200 A

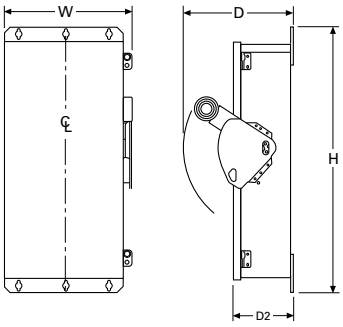


**Note:** A factory-installed ground lug is supplied in all heavy-duty safety switches.

***Notes***

① Lower windows are only available for 200–1200 A switches.
② For two-pole applications, use outside poles of three-pole switch.
③ NEMA 12/3R enclosures (30–1200 A) can be field modified to meet NEMA 3R rainproof requirements when a factory-provided drain hole is opened.
④ Not suitable for service entrance per NEC 215.10 and 230.95.

Receptacle Switch

## Contents


| *Description* | *Page* |
|---|---|
| Product Overview | **V2-T1-2** |
| General-Duty | **V2-T1-25** |
| Heavy-Duty | **V2-T1-30** |
| Heavy-Duty Double-Door Safety Switch | **V2-T1-41** |
| Six-Pole Switches | **V2-T1-45** |
| Double-Throw Switches | **V2-T1-48** |
| EnviroLine Stainless Steel Switch | **V2-T1-55** |
| Window Switches | **V2-T1-59** |
| Receptacle Switches | |
| Product Selection | **V2-T1-63** |
| Non-Metallic KRYDON Switch | **V2-T1-64** |
| Shunt Trip Safety Switch | **V2-T1-67** |
| NEMA 7/9—Hazardous Location Disconnect Switch | **V2-T1-70** |
| Quick-Connect Switches | **V2-T1-72** |
| DC Disconnect Switches | **V2-T1-77** |
| Mill-Duty Rated, Heavy-Duty Safety Switch | **V2-T1-86** |
| Elevator Control Switch | **V2-T1-88** |
| Auxiliary Power Heavy-Duty Safety Switch | **V2-T1-91** |
| Left-Handed Safety Switch | **V2-T1-95** |
| Heavy-Duty Surge Switch | **V2-T1-96** |
| EZ Isolator™ (OLI) Switch | **V2-T1-98** |
| Pringle Bolted Pressure Switch | **V2-T1-101** |
| Type DS, Fusible and Non-Fusible | **V2-T1-104** |
| Type Visi-Flex DE-ION | **V2-T1-107** |
| Flange Mounted—Variable Depth | **V2-T1-111** |
| Flange Mounted—Fixed Depth | **V2-T1-115** |


## Receptacle Switches

### Product Description

These heavy-duty switches are pre-wired and interlocked to polarized receptacles for three-phase, three-wire, grounded type power plugs. Receptacles are interlocked to handle mechanisms so that power plugs may not be inserted or removed when the switch is in the ON position unless noted otherwise. Ratings are 30–100 A, 600 Vac, NEMA 12/3R, 4X stainless steel enclosures.

- 30–100 A
- Power plugs not supplied with the receptacle
- Can be supplied with viewing windows

### Application Description

These are used for portable power applications such as welders, infrared ovens, batch feeders, conveyors, truck and marine docks.

### Standards and Certifications

- UL 98 listed NEMA approved
- NEMA KS-1 approved
- UL listed File No. E5239

Listed

**Note:** For Cam-Lok and Posi-Lok style receptacles, see Eaton's Quick Connect Switch.

#### *Seismic Qualifications*

- Heavy-duty switches exceed the requirements of Uniform Building Code (UBC) and California Code Title 24 OSP-0011-10, OSP-0012-10

## Product Selection

***600 Vac Heavy-Duty, Single-Throw with Receptacle, Fusible, Non-Fusible***

**DH362FDK2WR**

### Safety Switch with Receptacle K-Series, Three-Pole, 600 Volt Fuse Clips—Fusible

| Ampere Rating Switch | Ampere Rating Receptacle | Power Plug | NEMA 12/3R Enclosure Catalog Number | NEMA 12/3R Enclosure with Window Catalog Number | NEMA 4X Enclosure Catalog Number | NEMA 4X Enclosure with Window Catalog Number |
|---|---|---|---|---|---|---|
| **Crouse-Hinds ARKTITE® Receptacle** | | | | | | |
| 30 | 30 | Accepts Crouse-Hinds® **APJ3485** | **DH361FDK2WR** | **DH361FDK2WRW** | **DH361FWK2WR** | **DH361FWK2WRW** |
| 60 | 60 | **APJ6485** | **DH362FDK2WR** | **DH362FDK2WRW** | **DH362FWK2WR** | **DH362FWK2WRW** |
| 100 | 100 | **APJ10487** | **DH363NDK2WR** | **DH363NDK2WRW** | **DH363NWK2WR** | **DH363NWK2WRW** |

### Safety Switch with Receptacle K-Series, Three-Pole, 600 Volt Fuse Clips—Non-Fusible

| Ampere Rating Switch | Ampere Rating Receptacle | Power Plug | NEMA 12/3R Enclosure Catalog Number | NEMA 12/3R Enclosure with Window Catalog Number | NEMA 4X Enclosure Catalog Number | NEMA 4X Enclosure with Window Catalog Number |
|---|---|---|---|---|---|---|
| **Crouse-Hinds ARKTITE Receptacle** | | | | | | |
| 30 | 30 | Accepts Crouse-Hinds **APJ3485** | **DH361UDK2WR** | **DH361UDK2WRW** | **DH361UWK2WR** | **DH361UWK2WRW** |
| 60 | 60 | **APJ6485** | **DH362UDK2WR** | **DH362UDK2WRW** | **DH362UWK2WR** | **DH362UWK2WRW** |
| 100 | 100 | **APJ10487** | **DH363UDKN2WR** | **DH363UDKN2WRW** | **DH363UWKN2WR** | **DH363UWKN2WRW** |

***Notes***

Contact the Safety Switch Flex Center at FlexSwitches@eaton.com for additional options including viewing windows and other receptacle manufacturers.
Power plugs are not available through Eaton.

**Non-Metallic KRYDON Switch**

## Contents


| *Description* | *Page* |
|---|---|
| Product Overview | **V2-T1-2** |
| General-Duty | **V2-T1-25** |
| Heavy-Duty | **V2-T1-30** |
| Heavy-Duty Double-Door Safety Switch | **V2-T1-41** |
| Six-Pole Switches | **V2-T1-45** |
| Double-Throw Switches | **V2-T1-48** |
| EnviroLine Stainless Steel Switch | **V2-T1-55** |
| Window Switches | **V2-T1-59** |
| Receptacle Switches | **V2-T1-62** |
| Non-Metallic KRYDON Switch | |
| Product Selection | **V2-T1-65** |
| Dimensions | **V2-T1-66** |
| Shunt Trip Safety Switch | **V2-T1-67** |
| NEMA 7/9—Hazardous Location Disconnect Switch | **V2-T1-70** |
| Quick-Connect Switches | **V2-T1-72** |
| DC Disconnect Switches | **V2-T1-77** |
| Mill-Duty Rated, Heavy-Duty Safety Switch | **V2-T1-86** |
| Elevator Control Switch | **V2-T1-88** |
| Auxiliary Power Heavy-Duty Safety Switch | **V2-T1-91** |
| Left-Handed Safety Switch | **V2-T1-95** |
| Heavy-Duty Surge Switch | **V2-T1-96** |
| EZ Isolator™ (OLI) Switch | **V2-T1-98** |
| Pringle Bolted Pressure Switch | **V2-T1-101** |
| Type DS, Fusible and Non-Fusible | **V2-T1-104** |
| Type Visi-Flex DE-ION | **V2-T1-107** |
| Flange Mounted—Variable Depth | **V2-T1-111** |
| Flange Mounted—Fixed Depth | **V2-T1-115** |


## Non-Metallic KRYDON Switch

### Product Description

This switch has a KRYDON™ enclosure. These are compression molded fiberglass reinforced polyester enclosure, which is capable of withstanding almost any corrosive environment. Ratings are 30–200 A, 240–600 Vac, fusible and non-fusible. Enclosure is NEMA 4X rated.

### Features

- 30–200 A
- KRYDON high-impact strength fiberglass reinforced polyester material
- Horsepower rated
- Suitable for service entrance use
- Fusible and non-fusible
- Stainless steel external hardware

### Standards and Certifications

- UL 98 listed File No. E5239

Listed

#### *Seismic Qualifications*

- Heavy-duty switches exceed the requirements of Uniform Building Code (UBC) and California Code Title 24 OSP-0011-10, OSP-0012-10

## Product Selection

DH361UCK

### 240 Vac Heavy-Duty Non-Metallic Fusible

| System | Ampere Rating | Fuse Class Provision | Maximum Horsepower Ratings AC Standard Fuse Single-Phase | Three-Phase | Time Delay Single-Phase | Three-Phase | DC 250 V | NEMA 4X Enclosure Corrosion-Resistant, Non-Metallic Catalog Number |
|---|---|---|---|---|---|---|---|---|
| **Three-Pole, 240 Vac—250 Vdc (Suitable for Service Entrance Use with a Neutral Kit Installed)** | | | | | | | | |
| 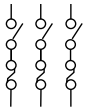 | 30 | H or R | 1-1/2 | 3 | — | 7-1/2 | — | **DH321FCK** ① |
| | 60 | H or R | 3 | 7-1/2 | — | 15 | — | **DH322FCK** |
| | 100 | H or R | 7-1/2 | 15 | — | 30 | 20 | **DH323FCK** |
| | 200 | H or R | 15 | 25 | — | 60 | 40 | **DH324FCK** |
| **Four-Wire (Three Blades, Three Fuses, S/N), 240 Vac—250 Vdc** | | | | | | | | |
| 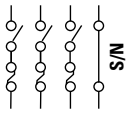 | 30 | H or R | — | 3 | — | 7-1/2 | — | **DH321NCK** ① |
| | 60 | H or R | — | 7-1/2 | — | 15 | — | **DH322NCK** |
| | 100 | H or R | — | 15 | — | 30 | 20 | **DH323NCK** |
| | 200 | H or R | — | 25 | — | 60 | — | **DH324NCK** |

### 600 Vac Heavy-Duty Non-Metallic Fusible

| System | Ampere Rating | Fuse Class Provision | Maximum Horsepower Ratings with Time Delay Fuses Single-Phase AC 480 V | 600 V | Three-Phase AC 480 V | 600 V | DC 250 V | 600 V | NEMA 4X Enclosure Corrosion-Resistant, Non-Metallic Catalog Number |
|---|---|---|---|---|---|---|---|---|---|
| **Three-Pole, 480 Vac—600 Vac, 250 Vdc (Suitable for Service Entrance Use with a Neutral Kit Installed)** | | | | | | | | | |
| 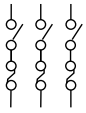 | 30 | H or R | 7-1/2 | 10 | 15 | 20 | — | — | **DH361FCK** ① |
| | 60 | H or R | 20 | 25 | 30 | 50 | — | — | **DH362FCK** |
| | 100 | H or R | 30 | 30 | 60 | 75 | — | — | **DH363FCK** |
| | 200 | H or R | 50 | 50 | 125 | 150 | — | — | **DH364FCK** |
| **Four-Wire (Three Blades, Three Fuses, S/N), 480 Vac—600 Vac, 250 Vdc** | | | | | | | | | |
| 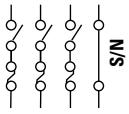 | 30 | H or R | 7-1/2 | 10 | 15 | 20 | — | — | **DH361NCK** ① |
| | 60 | H or R | 20 | 25 | 30 | 50 | — | — | **DH362NCK** |
| | 100 | H or R | 30 | 30 | 60 | 75 | — | — | **DH363NCK** |
| | 200 | H or R | 50 | 50 | 125 | 150 | — | — | **DH364NCK** |

### 600 Vac Heavy-Duty Non-Metallic Non-Fusible 277/480–600 V

| System | Ampere Rating | Maximum Horsepower Ratings with Time Delay Fuses Single-Phase AC 240 V | 480 V | 600 V | Three-Phase AC 240 V | 480 V | 600 V | DC 250 V | 600 V | NEMA 4X Enclosure Corrosion-Resistant, Non-Metallic Catalog Number |
|---|---|---|---|---|---|---|---|---|---|---|
| **Three-Pole, 480 Vac—600 Vac, 250 Vdc (Suitable for Service Entrance Use with a Neutral Kit Installed)** | | | | | | | | | | |
| | 30 | 3 | 7-1/2 | 10 | 10 | 20 | 30 | 5 | — | **DH361UCK** |
| | 60 | 10 | 20 | 25 | 20 | 50 | 60 | 10 | — | **DH362UCK** |
| | 100 | 20 | 40 | 50 | 40 | 75 | 100 | 20 | — | **DH363UCK** |
| | 200 | 15 | 50 | 50 | 60 | 125 | 150 | 40 | — | **DH364UCK** |

***Note***

① 30 A heavy-duty switches with Type J fuse provisions are available from the factory only.

1

## Dimensions

Approximate Dimensions in Inches (mm)

**Note:** Dimensions are for estimating purposes only.

### 240 Vac and 600 Vac Heavy-Duty Non-Metallic

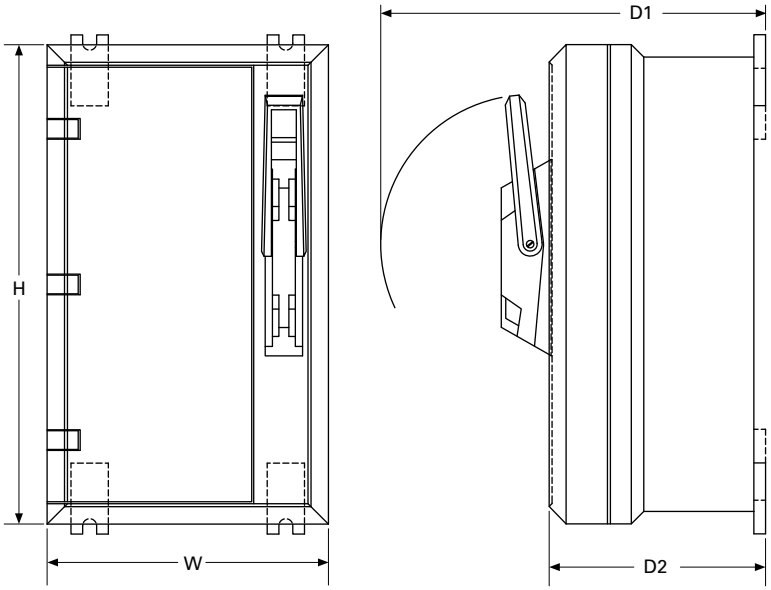


### Non-Metallic NEMA 4X Rated Safety Switches, Fusible and Non-Fusible

| Amperage | Height<br>Height (H) | Width<br>Width (W) | Depth<br>Depth (D1) | Depth (D2) | Weight<br>Lb (kg) |
|---|---|---|---|---|---|
| 30 A | 19.25 (489.0) | 11.30 (287.0) | 15.46 (392.7) | 8.63 (219.2) | 32 (14.5) |
| 60 A | 19.25 (489.0) | 11.30 (287.0) | 15.46 (392.7) | 8.63 (219.2) | 32 (14.5) |
| 100 A | 27.25 (692.2) | 15.30 (388.6) | 16.46 (418.1) | 9.70 (246.4) | 45 (20.4) |
| 200 A | 27.25 (692.2) | 25.30 (642.6) | 16.46 (418.1) | 9.70 (246.4) | 77 (35.0) |

Shunt Trip Safety Switch

## Contents


| Description | Page |
|---|---|
| Product Overview | V2-T1-2 |
| General-Duty | V2-T1-25 |
| Heavy-Duty | V2-T1-30 |
| Heavy-Duty Double-Door Safety Switch | V2-T1-41 |
| Six-Pole Switches | V2-T1-45 |
| Double-Throw Switches | V2-T1-48 |
| EnviroLine Stainless Steel Switch | V2-T1-55 |
| Window Switches | V2-T1-59 |
| Receptacle Switches | V2-T1-62 |
| Non-Metallic KRYDON Switch | V2-T1-64 |
| Shunt Trip Safety Switch | |
| Catalog Number Selection | V2-T1-68 |
| Dimensions | V2-T1-69 |
| NEMA 7/9—Hazardous Location Disconnect Switch | V2-T1-70 |
| Quick-Connect Switches | V2-T1-72 |
| DC Disconnect Switches | V2-T1-77 |
| Mill-Duty Rated, Heavy-Duty Safety Switch | V2-T1-86 |
| Elevator Control Switch | V2-T1-88 |
| Auxiliary Power Heavy-Duty Safety Switch | V2-T1-91 |
| Left-Handed Safety Switch | V2-T1-95 |
| Heavy-Duty Surge Switch | V2-T1-96 |
| EZ Isolator™ (OLI) Switch | V2-T1-98 |
| Pringle Bolted Pressure Switch | V2-T1-101 |
| Type DS, Fusible and Non-Fusible | V2-T1-104 |
| Type Visi-Flex DE-ION | V2-T1-107 |
| Flange Mounted—Variable Depth | V2-T1-111 |
| Flange Mounted—Fixed Depth | V2-T1-115 |


# Shunt Trip Safety Switch

## Product Description

The shunt trip technology enhances safety by providing a means to open a safety switch electronically. When using an emergency stop, safety interlock or similar means, the remote operation capability of the shunt trip switch no longer requires personnel to manually open the switch with the handle, enhancing safety and improving productivity.

The shunt trip safety switch can be configured to meet the needs of safety applications in industrial and commercial environments. The switches can be signaled to electronically operate the trip mechanism and interrupt the flow of power when a defined electrical condition is detected via protection relay.

The shunt trip safety switch builds on Eaton's extensive portfolio of safety switch solutions, incorporating a side-handle operation mechanism and visible blade indication that have decades of successful installation and operation.

## Application Examples

- Arc energy reduction ①
- Ground fault ①
- Remote opening (distant from switch)
- E-stop
- Safety interlocking
- Machinery OEM interlocking
- Cost-effective solution for high-interrupt applications

## Features

- 30–1200 A (240–600 Vac)
- Enclosure ratings: NEMA 12/3R/1, 4 (painted steel), 4X (stainless steel)
- Horsepower ratings are the same as Eaton's standard heavy-duty safety switches
- Fusible devices have short-circuit ratings of up to 200 kAIC
- Variety of coil voltages available
- Visible means of disconnect
- Standard heavy-duty safety switch design with integrated shunt trip module
- Passes Class 1 ground fault testing (1200% opening)
- Integral ground fault available for 480 Vac service entrance applications (NEC 230.95)
- Integral arc energy reduction system available (NEC 240.67)
- Overcurrent protection ②

## Standards and Certifications

- UL 98 file number E5239 (600 Vac maximum)
- CSA C22.2 No. 4, file number LL69743 (600 Vac maximum)

**Note:** CSA listing not applicable to integrated arc energy reduction system.

***Notes***

① Relay and applicable sensors/CTs available integrated into safety switch.

② When an arc energy reduction relay is integrated into the switch, the relay includes overcurrent protection. A time delay dial sets the overcurrent response curve to allow coordination with the fuse time/current curve.

1

## Catalog Number Selection

### Shunt Trip Safety Switch

**STS 3 6 8 N W 3 2 - 1 B 00**

**Switch Series**
**STS** = Shunt trip switch (UL)

**Number of Poles**
**2** = Two-pole
**3** = Three-pole
**4** = Four-pole

**Voltage**
**2** = 240 Vac max.
**6** = 600 Vac max.

**Ampere Rating**

| | |
|---|---|
| **1** = 30 A | **5** = 400 A |
| **2** = 60 A | **6** = 600 A |
| **3** = 100 A | **7** = 800 A |
| **4** = 200 A | **8** = 1200 A |

**Protection**
**F** = Fusible without neutral
**N** = Fusible with neutral
**U** = Non-fusible ①

**NEMA Type Enclosure Rating**
**D** = NEMA 12/3R/1
**P** = NEMA 4 (painted steel)
**W** = NEMA 4X, stainless 304
**X** = NEMA 4X, stainless 316

**Shunt Trip Coil Voltage** ②
**3** = 120 Vac
**6** = 24 Vdc

**CPT Voltage**
**0** = No CPT
**1** = 480 Vac ③
**2** = 208 Vac
**3** = 240 Vac
**4** = 600 Vac ③

**Auxiliary Switch**
**BLANK** = No auxiliary switches
**1** = 1NO/1NC alarm switch only
**2** = 1NO/1NC auxiliary contact only
**3** = 2NO/2NC auxiliary contacts only
**4** = 1NO/1NC auxiliary contact and 1NO/1NC alarm switch
**5** = 2NO/2NC auxiliary contacts and 1NO/1NC alarm switch

**Type of Protective Relay** ①④⑤⑥
**0** = No relay
**A** = Arc energy reduction relay ⑦⑧
**B** = Ground fault relay ⑦
**C** = Arc energy reduction relay/ground fault relay ⑦⑧

**Additional Options/ Modifications**
**00** = No accessories
**CL** = Copper lugs
**CP** = Control pole
**0J** = Factory-converted provisions for Class J fusing
**0N** = Factory-installed neutral for non-fused switch
**0T** = Factory-converted provisions for Class T fusing
**0W** = Viewing window over switch blades

***Notes***
① Relays can only be used with fusible switches.
② For alternate coil voltages, please contact the Flex Center.
③ Available for 600 Vac switches only.
④ Shunt trip safety switch with relay protection must use 120 Vac coils.
⑤ Only one relay option allowed.
⑥ Relay viewing window standard with relay option.
⑦ Available for 400–1200 A fusible switches only.
⑧ Options A and C are not available for a two-pole switch.

## Dimensions

### Shunt Trip Safety Switch—240 Vac and 600 Vac—Dimensions and Ratings

| Ampere Rating | Fuse Class ① | Number of Poles | Enclosure Dimensions ②, Exterior in Inches (mm) Height (H) | Width (W) | Depth ($D_1$) | Depth ($D_2$) |
|---|---|---|---|---|---|---|
| **Fusible** | | | | | | |
| 30 | H or R | 2, 3 or 4 ③ | 21.58 (548.1) | 11.58 (294.1) | 11.43 (290.3) | 5.58 (141.7) |
| 60 | H or R | 2, 3 or 4 ③ | 21.58 (548.1) | 11.58 (294.1) | 11.43 (290.3) | 5.58 (141.7) |
| 100 | H or R | 2, 3 or 4 ③ | 24.95 (633.7) | 14.89 (378.2) | 11.51 (282.4) | 5.58 (141.7) |
| 200 | H or R | 2, 3 or 4 | 35.38 (898.7) | 20.11 (510.8) | 11.61 (294.9) | 6.45 (163.8) |
| 400 | H or R | 2, 3 or 4 | 57.47 (1459.7) | 27.29 (693.2) | 12.43 (315.7) | 7.42 (188.5) |
| 600 | H or R | 2, 3 | 62.97 (1599.4) | 28.29 (718.6) | 12.43 (315.7) | 7.42 (188.5) |
| 800 | L | 2, 3 | 71.72 (1821.7) | 29.54 (750.3) | 12.43 (315.7) | 7.42 (188.5) |
| 1200 | L | 2, 3 | 72.50 (1841.5) | 47.23 (1199.6) | 23.15 (588.0) | 12.46 (316.5) |
| **Non-Fusible** | | | | | | |
| 30 | — | 2, 3 or 4 ③ | 21.58 (548.1) | 11.58 (294.1) | 11.43 (290.3) | 5.58 (141.7) |
| 60 | — | 2, 3 or 4 ③ | 21.58 (548.1) | 11.58 (294.1) | 11.43 (290.3) | 5.58 (141.7) |
| 100 | — | 2, 3 or 4 ③ | 24.95 (633.7) | 14.89 (378.2) | 11.51 (282.4) | 5.58 (141.7) |
| 200 | — | 2, 3 or 4 | 35.38 (898.7) | 20.11 (510.8) | 11.61 (294.9) | 6.45 (163.8) |
| 400 | — | 2, 3 or 4 | 57.47 (1459.7) | 27.29 (693.2) | 12.43 (315.7) | 7.42 (188.5) |
| 600 | — | 2, 3 | 62.97 (1599.4) | 28.29 (718.6) | 12.43 (315.7) | 7.42 (188.5) |
| 800 | — | 2, 3 | 71.72 (1821.7) | 29.54 (750.3) | 12.43 (315.7) | 7.42 (188.5) |
| 1200 | — | 2, 3 | 72.50 (1841.5) | 47.23 (1199.6) | 23.15 (588.0) | 12.46 (316.5) |

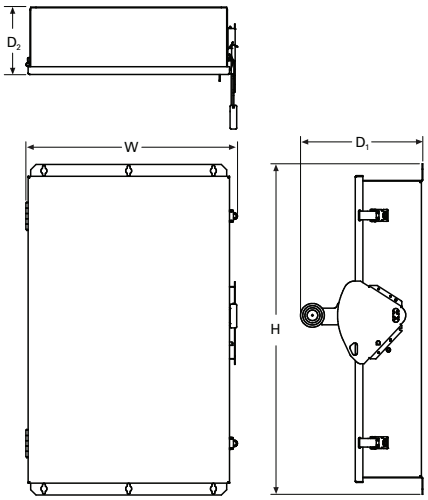


### Terminal/Lug Wire Range

| Ampere Rating | Minimum—Maximum | Wire Type |
|---|---|---|
| 30 | #14–#2 | Cu/Al |
| 60 | #14–#2 | Cu/Al |
| 100 | #14–#1/0 | Cu/Al |
| 200 | #6–300 kcmil | Cu/Al |
| 400 | (2) 1/0–300 kcmil or (1) 1/0–750 kcmil | Cu/Al |
| 600 | (1) #2–600 kcmil and (1) 1/0–750 kcmil | Cu/Al |
| 800 | (4) 1/0–750 kcmil | Cu/Al |
| 1200 | (4) 1/0–750 kcmil | Cu/Al |

***Notes***

① Class H fuse clips supplied as standard on fusible devices 30–600 A, Class L for 800–1200 A; Class R, J, T fuse clips available.

② Accurate for all enclosure NEMA type ratings—12/3R/1, 4, 4X stainless steel.

③ Four-pole devices are wider than dimension for 30, 60 and 100 A devices. Consult factory for details.

DS361UX

## Contents


| Description | Page |
|---|---|
| Product Overview | V2-T1-2 |
| General-Duty | V2-T1-25 |
| Heavy-Duty | V2-T1-30 |
| Heavy-Duty Double-Door Safety Switch | V2-T1-41 |
| Six-Pole Switches | V2-T1-45 |
| Double-Throw Switches | V2-T1-48 |
| EnviroLine Stainless Steel Switch | V2-T1-55 |
| Window Switches | V2-T1-59 |
| Receptacle Switches | V2-T1-62 |
| Non-Metallic KRYDON Switch | V2-T1-64 |
| Shunt Trip Safety Switch | V2-T1-67 |
| NEMA 7/9—Hazardous Location Disconnect Switch | |
| Product Selection | V2-T1-71 |
| Dimensions | V2-T1-71 |
| Quick-Connect Switches | V2-T1-72 |
| DC Disconnect Switches | V2-T1-77 |
| Mill-Duty Rated, Heavy-Duty Safety Switch | V2-T1-86 |
| Elevator Control Switch | V2-T1-88 |
| Auxiliary Power Heavy-Duty Safety Switch | V2-T1-91 |
| Left-Handed Safety Switch | V2-T1-95 |
| Heavy-Duty Surge Switch | V2-T1-96 |
| EZ Isolator™ (OLI) Switch | V2-T1-98 |
| Pringle Bolted Pressure Switch | V2-T1-101 |
| Type DS, Fusible and Non-Fusible | V2-T1-104 |
| Type Visi-Flex DE-ION | V2-T1-107 |
| Flange Mounted—Variable Depth | V2-T1-111 |
| Flange Mounted—Fixed Depth | V2-T1-115 |


## NEMA 7/9—Hazardous Location Disconnect Switch

### Product Description

Eaton's Type DS switch is used as the switching device. Ratings are 30–100 A, 600 Vac, fusible and non-fusible.

### Application Description

The cast aluminum enclosure is ideally suited for harsh industrial applications including petrochemical facilities, mining operations, pharmaceutical plants and wastewater treatment facilities.

### Features

- 30–100 A
- 600 Vac fusible and non-fusible

### Standards and Certifications

- UL 98
- UL listed File No. E5239

### Compliances

| UL Classified—Standard 886 File No. E84577 | CSA Certified—Standard C22.2 File No. LR 42131-6 |
|---|---|
| Class *I*, Division 1 and 2, Groups B, C and D | Class *I*, Division 1 and 2, Groups B, C and D |
| Class *II*, Division 1 and 2, Groups E, F and G | Class *II*, Division 1 and 2, Groups E, F and G |
| Class *III*, Division 1 and 2 | Class *III*, Division 1 and 2 |
| NEMA 7/9 | NEMA 7/9 |
| Zone 1, *IIB* + $H_2$ | Zone 1, *IIB* + $H_2$ |

c UL Listed

## Product Selection

DS361UX

### NEMA 7/9 Enclosure Sizes—Fusible

| Ampere Rating | Maximum Horsepower Ratings Three-Phase AC 480 V | 600 V | DC 250 V | Fuse Class Provision | Number of Poles | Voltage | Enclosure Number | Catalog Number |
|---|---|---|---|---|---|---|---|---|
| 30 | 15 | 20 | 5 | J | 3 | 600 Vac, 125/250 Vdc | 1 | **DS361FX** |
| 60 | 30 | 50 | 10 | J | 3 | 600 Vac, 125/250 Vdc | 2 | **DS362FX** |
| 100 | 60 | 75 | 20 | J | 3 | 600 Vac, 125/250 Vdc | 3 | **DS363FX** |

### NEMA 7/9 Enclosure Sizes—Non-Fusible

| Ampere Rating | Maximum Horsepower Ratings Three-Phase AC 480 V | 600 V | DC 250 V | Fuse Class Provision | Number of Poles | Voltage | Enclosure Number | Catalog Number |
|---|---|---|---|---|---|---|---|---|
| 30 | 15 | 20 | 5 | — | 3 | 600 Vac, 125/250 Vdc | 1 | **DS361UX** |
| 60 | 30 | 50 | 10 | — | 3 | 600 Vac, 125/250 Vdc | 1 | **DS362UX** |
| 100 | 60 | 75 | 20 | — | 3 | 600 Vac, 125/250 Vdc | 2 | **DS363UX** |

## Dimensions

Approximate Dimensions in Inches (mm)

### NEMA 7/9 Enclosure Sizes ①

| Dimension | Non-Fusible Disconnect Switch Catalog Number DS361UX | DS362UX | DS363UX | Fusible Disconnect Switch Catalog Number DS361FX | DS362FX | DS363FX |
|---|---|---|---|---|---|---|
| A | 9.74 (247.0) | 9.90 (251.0) | 10.28 (261.0) | 10.02 (255.0) | 9.90 (251.0) | 10.40 (264.0) |
| B | 5.00 (127.0) | 7.00 (178.0) | 9.00 (229.0) | 7.00 (178.0) | 7.00 (178.0) | 15.00 (380.0) |
| C | 10.47 (266.0) | 12.53 (318.0) | 14.67 (373.0) | 12.67 (322.0) | 12.53 (318.0) | 17.31 (440.0) |
| D | 11.13 (283.0) | 15.13 (384.0) | 17.13 (435.0) | 13.13 (333.0) | 15.13 (384.0) | 11.50 (292.0) |
| E | 12.47 (317.0) | 16.53 (420.0) | 18.67 (474.0) | 14.67 (373.0) | 16.53 (420.0) | 23.31 (592.0) |
| F | 3.50 (89.0) | 3.50 (89.0) | 3.50 (89.0) | 3.50 (89.0) | 3.50 (89.0) | 3.50 (89.0) |
| Weight in lb (kg) | 33 (15) | 51 (23) | 72 (33) | 47 (21) | 51 (23) | 108 (49) |

### NEMA 7/9—30–100 A

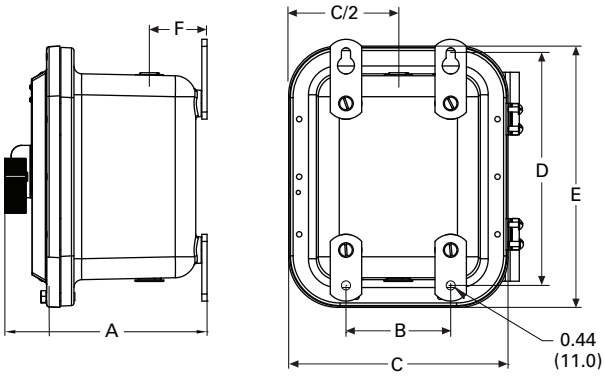


***Note***

① Accessories and modifications shown on **Page V2-T1-15** are NOT applicable to NEMA 7/9 disconnect switches.

**Quick-Connect, Single-Throw and Double-Throw Switches**

## Contents


| *Description* | *Page* |
|---|---|
| Product Overview | **V2-T1-2** |
| General-Duty | **V2-T1-25** |
| Heavy-Duty | **V2-T1-30** |
| Heavy-Duty Double-Door Safety Switch | **V2-T1-41** |
| Six-Pole Switches | **V2-T1-45** |
| Double-Throw Switches | **V2-T1-48** |
| EnviroLine Stainless Steel Switch | **V2-T1-55** |
| Window Switches | **V2-T1-59** |
| Receptacle Switches | **V2-T1-62** |
| Non-Metallic KRYDON Switch | **V2-T1-64** |
| Shunt Trip Safety Switch | **V2-T1-67** |
| NEMA 7/9—Hazardous Location Disconnect Switch | **V2-T1-70** |
| Quick-Connect Switches | |
| Catalog Number Selection | **V2-T1-73** |
| Product Selection | **V2-T1-75** |
| Dimensions | **V2-T1-76** |
| DC Disconnect Switches | **V2-T1-77** |
| Mill-Duty Rated, Heavy-Duty Safety Switch | **V2-T1-86** |
| Elevator Control Switch | **V2-T1-88** |
| Auxiliary Power Heavy-Duty Safety Switch | **V2-T1-91** |
| Left-Handed Safety Switch | **V2-T1-95** |
| Heavy-Duty Surge Switch | **V2-T1-96** |
| EZ Isolator™ (OLI) Switch | **V2-T1-98** |
| Pringle Bolted Pressure Switch | **V2-T1-101** |
| Type DS, Fusible and Non-Fusible | **V2-T1-104** |
| Type Visi-Flex DE-ION | **V2-T1-107** |
| Flange Mounted—Variable Depth | **V2-T1-111** |
| Flange Mounted—Fixed Depth | **V2-T1-115** |


## Quick-Connect Switches

### Product Description

These heavy-duty switches are available as single-throw and double-throw designs with Cam-Lok or Posi-Lok receptacles. Ratings are 240 V, 600 Vac, fusible and non-fusible.

- 30–1200 A
- NEMA 1 or 3R enclosures
- Provision for 200% neutral
- Non-magnetic metal mounting plate
- Crouse-Hinds "J" Power Series E1015, E1016, E1017 cam connectors
- Crouse-Hinds E200, E400 Posi-Lok panels
- Connector plugs are typically not provided, but may be special ordered
- Matching plug and cord sets are available from Eaton

### Features

Eaton's individual cable connector receptacle switches provide a convenient and safe way to quickly connect and disconnect portable equipment. The load side terminals are factory wired to individual receptacles located behind an interlocked door for added safety. The switch cannot be turned to the ON position without first closing the receptacle compartment door.

A spring-loaded flap door in the receptacle compartment allows the cables to exit the compartment, but seals the compartment when the switch is not in use. For outdoor applications, this will reduce the possibility of insects building nests in the receptacle compartment.

- Available in double-throw and single-throw designs
- Single-throw receptacles can wire to line or load side
- Service entrance rated

An additional flap door on the main compartment allows for quick connection in the event that the appropriate plugs are not readily available.

### Standards and Certifications

- UL listed File No. E5239

Listed

#### *Seismic Qualifications*

- Heavy-duty switches exceed the requirements of Uniform Building Code (UBC) and California Code Title 24 OSP-0011-10, OSP-0012-10

### Product Selection

For price and availability, contact the Switching Device Flex Center at 1-888-329-9272 or FlexSwitches@eaton.com.

## Catalog Number Selection

### Quick Connect Safety Switch

**DT 3 6 5 N U R K _ LC**

**Switch Type**
- **DT** = Heavy-duty double-throw
- **DH** = Heavy-duty single-throw

**Poles**
- **2** = Two-pole
- **3** = Three-pole
- **4** = Four-pole

**Maximum Voltage** ①
- **2** = 240 Vac
- **6** = 600 Vac

**Switch Ampacity**
- **3** = 100 A
- **4** = 200 A
- **5** = 400 A
- **6** = 600 A
- **7** = 800 A
- **8** = 1200 A

**Upper Switch** ②
- **U** = Unfused
- **F** = Fusible
- **N** = Fusible with solid neutral
- **SN** = Fusible with switched neutral

**Lower Switch**
- **U** = Unfused
- **F** = Fusible
- **N** = Fusible with solid neutral
- **SN** = Fusible with switched neutral

**Enclosure**
- **G** = NEMA 1
- **R** = NEMA 3R

**Series**
- **K** = K

**Receptacle Type**
- **LC** = Cam-Lok
- **LCR** = Cam-Lok reverse pin
- **LP** = Posi-Lok
- **LPR** = Posi-Lok reverse pin

**Neutral** ③
- **Blank** = No neutral or incl. with switch designation
- **N** = Solid neutral
- **SN** = Switched neutral

### Cord Set

Example: 100 ft cord set needed for a DT364NRKLC.

**5 BOY 1 1 100 C F M M**

**Number of Cables/Plugs**
- **3** = 3 per cord set
- **4** = 4 per cord set
- **5** = 5 per cord set
- **6** = 6 per cord set
- **7** = 7 per cord set
- **8** = 8 per cord set
- **9** = 9 per cord set
- **10** = 10 per cord set

**Phase Plugs Color Scheme**
- **BRB** = Black, Red, Blue
- **BOY** = Brown, Orange, Yellow
- **BR** = Black, Red
- **BO** = Brown, Orange

**Number of Neutral Plugs**
- **0** = 0 Plugs
- **1** = 1 Plug
- **2** = 2 Plugs
- **4** = 4 Plugs

**Number of Ground Plugs**
- **1** = 1 Plug
- **2** = 2 Plugs

**Cord Length per Conductor**
- **000** = 0 feet
- **010** = 10 feet
- **015** = 15 feet
- **020** = 20 feet
- **025** = 25 feet
- **050** = 50 feet
- **100** = 100 feet
- **125** = 125 feet

**Type**
- **C** = Cam-Lok 4/0
- **C2** = Cam-Lok 2/0 ④
- **C7** = Cam-Lok 4/0 (17 Series) ④
- **P** = Posi-Lok 4/0
- **P2** = Posi-Lok 2/0 E0200 Series
- **P4** = Posi-Lok 2/0 E0400 Series ④

**Phase Plug Gender**
- **M** = Male
- **F** = Female

**Neutral Plug Gender**
- **M** = Male
- **F** = Female
- **0** = No Neutral

**Ground Plug Gender**
- **M** = Male
- **F** = Female

***Notes***

① Receptacle colors are voltage specific. See table on **Page V2-T1-74** for standard colors offered.

② When upper and lower switches are the same, the switch configuration is consolidated in one letter (e.g., "U" not "UU").
Also, a switch with a neutral will have either a solid neutral or a switched neutral, not both. Lastly, a switched neutral pole is never fused.

③ This field is only used when a switch is completely non-fused.

④ Customer special requests, not common.

We use Type W 4/0 CU flex cable.

**This table is intended for use in breaking down existing catalog numbers. It is not intended for building new catalog numbers.**

1

***Standard Receptacle Color Codes provided on Switches***

Matching plug and cord sets are available from Eaton.

## Single-Throw Switches

| | Ground | | | | Neutral | | | | Phase A | | | | Phase B | | | | Phase C | | | |
|---|---|---|---|---|---|---|---|---|---|---|---|---|---|---|---|---|---|---|---|---|
| | Gender | | Color | | Gender | | Color | | Gender | | Color | | Gender | | Color | | Gender | | Color | |
| Suffix | Male | Female | 240 V | 600 V | Male | Female | 240 V | 600 V | Male | Female | 240 V | 600 V | Male | Female | 240 V | 600 V | Male | Female | 240 V | 600 V |
| LC | ■ | — | G | G | ■ | — | WH | WH | — | ■ | BK | BR | — | ■ | RD | OR | — | ■ | BL | YL |
| LCR | — | ■ | G | G | — | ■ | WH | WH | ■ | — | BK | BR | ■ | — | RD | OR | ■ | — | BL | YL |
| LP | — | ■ | G | G | — | ■ | WH | WH | — | ■ | BK | BR | — | ■ | RD | OR | — | ■ | BL | YL |
| LPR | ■ | — | G | G | ■ | — | WH | WH | ■ | — | BK | BR | ■ | — | RD | OR | ■ | — | BL | YL |

## Double-Throw Switches

| | Ground | | | | Neutral | | | | Phase A | | | | Phase B | | | | Phase C | | | |
|---|---|---|---|---|---|---|---|---|---|---|---|---|---|---|---|---|---|---|---|---|
| | Gender | | Color | | Gender | | Color | | Gender | | Color | | Gender | | Color | | Gender | | Color | |
| Suffix | Male | Female | 240 V | 600 V | Male | Female | 240 V | 600 V | Male | Female | 240 V | 600 V | Male | Female | 240 V | 600 V | Male | Female | 240 V | 600 V |
| LC | — | ■ | G | G | — | ■ | WH | WH | ■ | — | BK | BR | ■ | — | RD | OR | ■ | — | BL | YL |
| LCR | ■ | — | G | G | ■ | — | WH | WH | — | ■ | BK | BR | — | ■ | RD | OR | — | ■ | BL | YL |
| LP | ■ | — | G | G | ■ | — | WH | WH | ■ | — | BK | BR | ■ | — | RD | OR | ■ | — | BL | YL |
| LPR | — | ■ | G | G | — | ■ | WH | WH | — | ■ | BK | BR | — | ■ | RD | OR | — | ■ | BL | YL |

## Legend

| | | | |
|---|---|---|---|
| G = Green | BK = Black | RD = Red | BL = Blue |
| WH = White | BR = Brown | OR = Orange | YL = Yellow |

**Note:** Chart shows typical color codes, other colors can be substituted.

## Product Selection

### *Quick-Connect Double-Throw*

Lug Capacity and Fusing

**Available Lug Capacities of the Double-Throw Switch Assembly with Cam-Lok or Posi-Lok Receptacles**

| Double-Throw Switch Size—Cam-Lok or Posi-Lok Receptacles | Standard Fuse | Service Terminal Openings | Load Terminal Openings | Switched Neutral Pole Load Terminal Openings | Solid Neutral Terminal Openings | Ground Terminal Openings | Receptacle Bypass Terminal |
|---|---|---|---|---|---|---|---|
| 100 | H or R | (1) 1/0–14 AWG Cu/Al | (1) 1/0–14 AWG Cu/Al | (1) 1/0–14 AWG Cu/Al | (2) 1/0–14 AWG, (1) 2–14 AWG Cu/Al | (3) 2–14 AWG Cu/Al | (1) 10–32 Screw mounting |
| 200 | H or R | (1) 300 kcmil–6 AWG Cu/Al | (1) 250 kcmil–6 AWG Cu/Al | (1) 250 kcmil–6 AWG Cu/Al | (2) 250 kcmil–6 AWG, (1) 1/0–14 AWG, (1) 2–14 AWG Cu/Al | (3) 2–14 AWG Cu/Al | (2) 1/4 Studs, 1.75-inch spacing |
| 400 | T | (1) 750 kcmil–1/0 or (2) 300 kcmil–1/0 Cu/Al | (1) 750 kcmil–1/0 or (2) 300 kcmil–1/0 Cu/Al | (1) 750 kcmil–1/0 or (2) 300 kcmil–1/0 Cu/Al | (6) 500 kcmil, (6) 250 kcmil–6 AWG Cu/Al | (4) 250 kcmil–6 AWG Cu/Al | (2) 1/2-13 UNC studs, 1.75-inch spacing |
| 600 | T | (4) 750 kcmil–1/0 Cu/Al | (4) 750 kcmil–1/0 Cu/Al | (4) 750 kcmil–1/0 Cu/Al | (6) 500–250 kcmil, (4) 250 kcmil–6 AWG Cu/Al | (4) 250 kcmil–6 AWG Cu/Al | (2) 1/2-13 UNC studs, 1.75-inch spacing |
| 800 | T | (4) 750 kcmil–1/0 Cu/Al | (4) 750 kcmil–1/0 Cu/Al | (4) 750 kcmil–1/0 Cu/Al | (6) 500–250 kcmil, (4) 250 kcmil–6 AWG Cu/Al | (4) 250 kcmil–6 AWG Cu/Al | (2) 1/2-13 UNC studs, 1.75-inch spacing |
| 1200 | L | (4) 750 kcmil–1/0 Cu/Al | (4) 750 kcmil–1/0 Cu/Al | (4) 750 kcmil–1/0 Cu/Al | (6) 500–250 kcmil, (4) 250 kcmil–6 AWG Cu/Al | (4) 250 kcmil–6 AWG Cu/Al | — |

### *Quick-Connect Single-Throw Company Switch*

Lug Capacity and Fusing

**Company Switch Available Lug Capacities of the Single-Throw Switch Assembly with Cam-Lok or Posi-Lok Receptacles**

| Switch Ampacity | Standard Fuse | Line Cu/Al | Load Terminal Openings Cu/Al ① | Switched Neutral Pole Load Terminal Openings Cu/Al | Solid Neutral Terminal Openings | Ground Terminal Openings Cu/Al | Receptacle Bypass Terminal |
|---|---|---|---|---|---|---|---|
| 100 | H or R | (1) 1/0–14 AWG | (1) 1/0–14 AWG | (1) 1/0–14 AWG | (2) 14 AWG–1/0 and (2) 6–14 AWG | (1) 2–14 AWG | (1) 1/0–14 AWG |
| 200 | H or R | (1) 300 kcmil–6 AWG | (1) 300 kcmil–6 AWG | (1) 300 kcmil–6 AWG | (2) 6 AWG–300 kcmil and (2) 6–14 AWG | (2) 2–14 AWG | (1) 300 kcmil–6 AWG |
| 400 | H or R | (1) 750 kcmil–1/0 or (2) 300 kcmil–1/0 | (1) 750 kcmil–1/0 or (2) 300 kcmil–1/0 | (1) 750 kcmil–1/0 or (2) 300 kcmil–1/0 | (2x) (2) 1/0–300 kcmil or (1) 1/0–750 kcmil and (3) 6 AWG–250 kcmil | (2) 250 kcmil–6 AWG | Crimp lug provisions |
| 600 | H or R | (1) 750 kcmil–1/0 and (1) 600 kcmil–2 | (1) 750 kcmil–1/0 and (1) 600 kcmil–2 | (1) 750 kcmil–1/0 and (1) 600 kcmil–2 | (2) 2 AWG–600 kcmil and 1/0–750 kcmil and (3) 6 AWG–250 kcmil | (2) 250 kcmil–6 AWG | Crimp lug provisions |
| 800 | L | (4) 750 kcmil–1/0 | (4) 750 kcmil–1/0 | (4) 750 kcmil–1/0 | (2x) (4) 1/0–750 kcmil and (3) 6 AWG–250 kcmil | (2) 250 kcmil–6 AWG | Crimp lug provisions |
| 1200 | L | (4) 750 kcmil–1/0 | (4) 750 kcmil–1/0 | (4) 750 kcmil–1/0 | (2x) (4) 1/0–750 kcmil and (3) 6 AWG–250 kcmil | (2) 250 kcmil–6 AWG | — |

### *Quick-Connect Single-Throw Generator Switch*

Lug Capacity and Fusing

**Generator Switch Available Lug Capacities of the Single-Throw Switch Assembly with Cam-Lok or Posi-Lok Receptacles**

| Switch Ampacity | Standard Fuse | Load Cu/Al | Service Terminal Openings Cu/Al ② | Switched Neutral Pole Load Terminal Openings Cu/Al | Solid Neutral Terminal Openings | Ground Terminal Openings Cu/Al | Receptacle Bypass Terminal |
|---|---|---|---|---|---|---|---|
| 100 | H or R | (1) 1/0–14 AWG | (1) 1/0–14 AWG | (1) 1/0–14 AWG | (2) 14 AWG–1/0 and (2) 6–14 AWG | (1) 2–14 AWG | (1) 1/0–14 AWG |
| 200 | H or R | (1) 300 kcmil–6 AWG | (1) 300 kcmil–6 AWG | (1) 300 kcmil–6 AWG | (2) 6 AWG–300 kcmil and (2) 6–14 AWG | (2) 2–14 AWG | (1) 300 kcmil–6 AWG |
| 400 | H or R | (1) 750 kcmil–1/0 or (2) 300 kcmil–1/0 | (1) 750 kcmil–1/0 or (2) 300 kcmil–1/0 | (1) 750 kcmil–1/0 or (2) 300 kcmil–1/0 | (2x) (2) 1/0–300 kcmil or (1) 1/0–750 kcmil and (3) 6 AWG–250 kcmil | (2) 250 kcmil–6 AWG | (1) 750 kcmil–1/0 or (2) 300 kcmil–1/0 |
| 600 | H or R | (4) 750 kcmil–1/0 | (4) 750 kcmil–1/0 | (4) 750 kcmil–1/0 | 2x) (4) 1/0–750 kcmil and (3) 6 AWG–250 kcmil | (2) 250 kcmil–6 AWG | (4) 750 kcmil–1/0 |
| 800 | L | (4) 750 kcmil–1/0 | (4) 750 kcmil–1/0 | (4) 750 kcmil–1/0 | (2x) (4) 1/0–750 kcmil and (3) 6 AWG–250 kcmil | (2) 250 kcmil–6 AWG | (4) 750 kcmil–1/0 |
| 1200 | L | (4) 750 kcmil–1/0 | (4) 750 kcmil–1/0 | (4) 750 kcmil–1/0 | (2x) (4) 1/0–750 kcmil and (3) 6 AWG–250 kcmil | (2) 250 kcmil–6 AWG | — |

***Notes***

① Load side terminals are factory wired to receptacles.

② Line side terminals are factory wired to receptacles.

1

## Dimensions

Approximate Dimensions in Inches (mm)

**Note:** Dimensions are for estimating purposes only.

### Quick Connect Double Throws, Fusible and Non-Fusible, 240 V and 600 V (1 of 2)

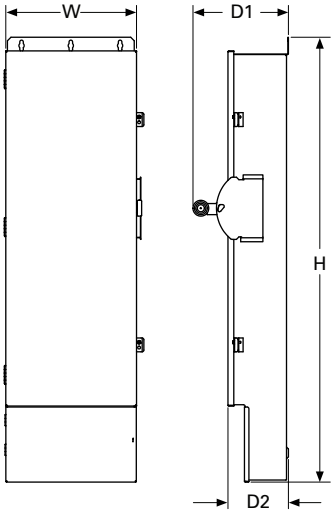


| Ampere Rating | Width (W) | Height (H) | Depth (D1) | Depth (D2) | Weight Lb (kg) |
|---|---|---|---|---|---|
| 100 | 18.57 (471.7) | 62.89 (1597.4) | 13.56 (344.4) | 8.59 (218.2) | 240 (109) |
| 200 | 18.57 (471.7) | 62.89 (1597.4) | 13.56 (344.4) | 8.59 (218.2) | 240 (109) |
| 1200 | 42.62 (1083.0) | 87.78 (2230.0) | 29.62 (752.0) | 20.47 (520.0) | 1025 (465) |

### Quick Connect Single Throws, Fusible and Non-Fusible, 240 V and 600 V

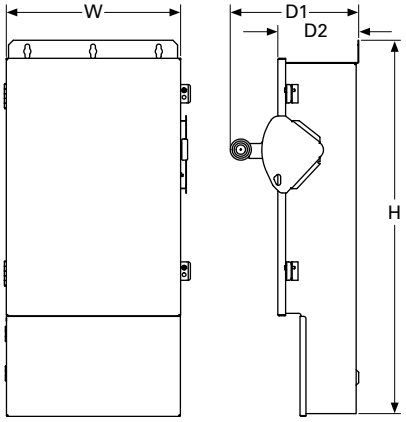


| Ampere Rating | Width (W) | Height (H) | Depth (D1) | Depth (D2) | Weight Lb (kg) |
|---|---|---|---|---|---|
| 100 | 18.57 (471.1) | 39.12 (993.6) | 13.68 (347.5) | 8.61 (218.7) | 85 (39) |
| 200 | 18.57 (471.1) | 41.87 (1063.5) | 13.68 (347.5) | 8.61 (218.7) | 140 (64) |
| 400 | 32.87 (834.9) | 73.79 (1874.3) | 16.10 (408.9) | 11.14 (283.0) | 370 (168) |
| 600 | 32.87 (834.9) | 73.79 (1874.3) | 16.10 (408.9) | 11.14 (283.0) | 370 (168) |
| 800 | 32.87 (834.9) | 85.04 (2160.0) | 21.73 (551.9) | 16.79 (426.5) | 540 (245) |
| 1200 | 42.62 (1083.0) | 90.23 (2292.0) | 29.62 (752.0) | 20.47 (520.0) | 915 (415) |

### Quick Connect Double Throws, Fusible and Non-Fusible, 240 V and 600 V (2 of 2)

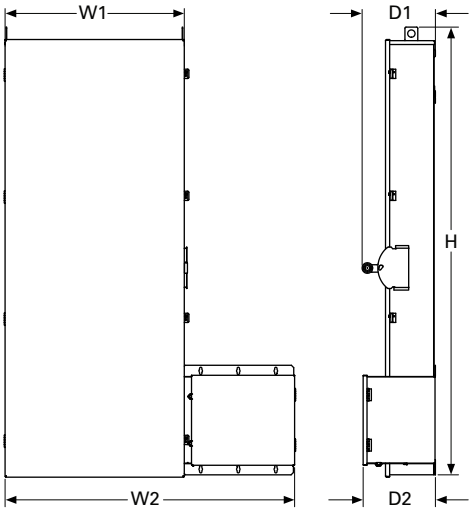


| Ampere Rating | Width (W1) | Width (W2) | Height (H) | Depth (D1) | Depth (D2) | Weight Lb (kg) |
|---|---|---|---|---|---|---|
| 400 | 26.68 (677.7) | 50.18 (1274.6) | 92.49 (2349.2) | 15.61 (396.5) | 15.40 (391.2) | 800 (363) |
| 600 | 38.18 (969.8) | 61.68 (1566.7) | 92.49 (2349.2) | 15.61 (396.5) | 15.40 (391.2) | 820 (372) |
| 800 | 38.18 (969.8) | 61.68 (1566.7) | 92.49 (2349.2) | 15.61 (396.5) | 15.40 (391.2) | 820 (372) |

DC Disconnect Switch

## Contents


| *Description* | *Page* |
|---|---|
| Product Overview | **V2-T1-2** |
| General-Duty | **V2-T1-25** |
| Heavy-Duty | **V2-T1-30** |
| Heavy-Duty Double-Door Safety Switch | **V2-T1-41** |
| Six-Pole Switches | **V2-T1-45** |
| Double-Throw Switches | **V2-T1-48** |
| EnviroLine Stainless Steel Switch | **V2-T1-55** |
| Window Switches | **V2-T1-59** |
| Receptacle Switches | **V2-T1-62** |
| Non-Metallic KRYDON Switch | **V2-T1-64** |
| Shunt Trip Safety Switch | **V2-T1-67** |
| NEMA 7/9—Hazardous Location Disconnect Switch | **V2-T1-70** |
| Quick-Connect Switches | **V2-T1-72** |
| DC Disconnect Switches | |
| Fusible and Non-Fusible 600 Vdc Disconnect (Single Circuit) | **V2-T1-78** |
| Solar Disconnects 600 Vdc and 1000 Vdc (Multi Circuit) | **V2-T1-79** |
| Solar Disconnects 1500 Vdc | **V2-T1-84** |
| Mill-Duty Rated, Heavy-Duty Safety Switch | **V2-T1-86** |
| Elevator Control Switch | **V2-T1-88** |
| Auxiliary Power Heavy-Duty Safety Switch | **V2-T1-91** |
| Left-Handed Safety Switch | **V2-T1-95** |
| Heavy-Duty Surge Switch | **V2-T1-96** |
| EZ Isolator™ (OLI) Switch | **V2-T1-98** |
| Pringle Bolted Pressure Switch | **V2-T1-101** |
| Type DS, Fusible and Non-Fusible | **V2-T1-104** |
| Type Visi-Flex DE-ION | **V2-T1-107** |
| Flange Mounted—Variable Depth | **V2-T1-111** |
| Flange Mounted—Fixed Depth | **V2-T1-115** |


## DC Disconnect Switches

### Overview

When photovoltaic panels convert the sun's energy into electricity, the power generated is direct current (DC). Typically, the systems are designed with DC system voltages in the 400–600 V range.

This is much higher voltage than typically found in building systems. The higher voltage, when combined with the lack of a current sine wave with zero crossings, creates a number of challenges in wiring, particularly when switching circuits on and off.

DC circuits consist of two wires—a positive and a negative. In most PV systems, one of these wires is grounded (like a neutral in an AC system). Which of the two wires is grounded is specified by the solar panel manufacturer.

The more common application is a negative ground, and the location of this bond is usually found at the inverter. Per the National Electrical Code (NEC) Section 690.5(A), only the current-carrying ungrounded conductor should be switched. Thus, in a negative-grounded system, only the positive wire is switched.

Unlike AC systems that possess a current sine wave with zero crossings, the interruption of higher voltage DC circuits requires an increased air gap to safely and quickly interrupt and break the arc. The increased gap is accomplished by wiring multiple poles of a single switch in series for safe arc interruption. All switch manufacturers require the use of multiple poles at 600 Vdc to maintain the UL listing.

For this reason, a switch should only be used to switch one circuit. The UL listing of these products does not permit multiple circuits to be switched by one switch. Eaton's new offering of PV switches have multiple poles factory-wired, and they are approved for NEC Article 690 applications right from the box. Other manufacturers require the contractor to add jumpers to a two- or three-pole switch, add a neutral, and add labels to meet this requirement. For fusible switches, the new Eaton PV switch requires only one fuse per switch—saving the customer at least one fuse on each switch.

### Product Description

There are three types of DC solar disconnect switches:

- Fusible and non-fusible 600 Vdc (single circuit)
- 600 Vdc and 1000 Vdc (multi circuit)
- 1500 Vdc

Fusible and Non-Fusible 600 Vdc Disconnect

## Contents

### *Description*

DC Disconnect Switches
Fusible and Non-Fusible 600 Vdc Disconnect (Single Circuit)

## Fusible and Non-Fusible 600 Vdc Disconnect (Single Circuit)

### Product Description

This heavy-duty, single-pole switch is capable of switching 1–600 Vdc circuits. Ratings are 30–600 A, 600 Vdc, fusible and non-fusible.

### Features

- Clear line-shield covering all live parts
- For factory modifications, refer to **Pages V2-T1-15**

### Standards and Certifications

- UL 98 listed, File No. E5239 and marked suitable for NEC Article 690 applications to UL 1741

Listed

### Seismic Qualifications

- Heavy-duty switches exceed the requirements of Uniform Building Code (UBC) and California Code Title 24 OSP-0011-10, OSP-0012-10

### 600 Vdc Heavy-Duty Fusible and Non-Fusible

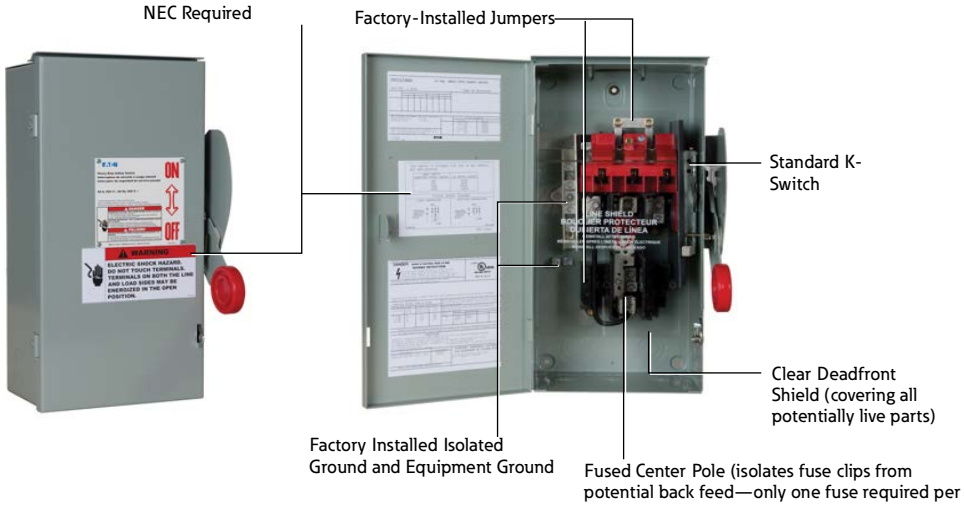


### Product Selection

#### Solar Disconnect Switches

| Ampere Rating | Fuse Class | NEMA 3R Catalog Number | NEMA 4X Catalog Number | NEMA 12/3R Catalog Number |
|---|---|---|---|---|
| 30 | R | DH161NRK | DH161NWK | DH161NDK |
| | | DH161URKN | DH161UWKN | DH161UDKN |
| 60 | R | DH162NRK | DH162NWK | DH162NDK |
| | | DH162URKN | DH162UWKN | DH162UDKN |
| 100 | R | DH163NRK | DH163NWK | DH163NDK |
| | | DH163URKN | DH163UWKN | DH163UDKN |
| 200 | R | DH164NRK | DH164NWK | DH164NDK |
| | | DH164URKN | DH164UWKN | DH164UDKN |
| 400 | R | DH165NRK | DH165NWK | DH165NDK |
| | | DH165URKN | DH165UWKN | DH165UDKN |
| 600 | R | DH166NRK | DH166NWK | DH166NDK |
| | | DH166URKN | DH166UWKN | DH166UDKN |

**Solar Disconnects 600 Vdc and 1000 Vdc**

## Contents

***Description*** ***Page***

DC Disconnect Switches
Solar Disconnects 600 Vdc and 1000 Vdc (Multi Circuit)
Features . . . . . **V2-T1-80**
Standards and Certifications . . . . . **V2-T1-80**
Catalog Number Selection. . . . . **V2-T1-80**
Technical Data and Specifications . . . . . **V2-T1-81**
Wiring Diagrams . . . . . **V2-T1-80**
Dimensions . . . . . **V2-T1-82**

## Solar Disconnects 600 Vdc and 1000 Vdc (Multi Circuit)

### Product Description

The latest addition to Eaton's solar disconnect family of products is the UL Listed 600 Vdc per pole, bi-directional disconnect. Listed to the UL 98B standard, this design has the capacity to switch multiple circuits of up to 600 Vdc each. Also included in the line are 1000 Vdc disconnects, designed for use in large scale projects where the higher voltage helps drive improved efficiencies.

The use of renewable energy sources is on the rise. Photovoltaic (PV) systems are among the fastest growing of the new green technologies, and they are being installed on a variety of building types and landscapes throughout North America. This results in a growing need for products to meet the requirements of these systems. Eaton's lineup of 600 Vdc per pole and 1000 Vdc switches are tested and listed to the rigorous UL 98B standard, in line with NEC 690 code requirements for PV installations.

### Application Description

Switching devices primarily designed for DC service require design features to increase the total arcing voltage. This can be achieved by designing larger single air gaps and multiple gaps in series, or by using magnetic fields to force arc movement. In this safety switch design, Eaton uses magnetic fields, created with the use of permanent magnets, to stretch the arc. These products are not polarity sensitive, so they can be used on either negative or positive grounded systems, and they provide protection regardless of whether the current flow is in the "normal" direction or is reversed (possible due to miswiring or under a fault condition).

**Note:** Photos shown above—
Left: 60 A, 3 circuit, 600 Vdc per pole, NEMA 3R.
Right: 200 A, 4 circuit, 600 Vdc per pole, NEMA 4, with isolated grounded return terminals.

#### *Grounded PV systems*

A large number of PV systems in North America to date are grounded systems. These systems will be either positive grounded or negative grounded. In a positive grounded system, the disconnect will switch (break) the negative (–) conductor only. Conversely, in a negative grounded system, the disconnect will switch (break) the positive (+) conductor only. It is important that the disconnect applied within a grounded PV system be properly rated for that specific system. Eaton's lineup of switches (600 Vdc and 1000 Vdc) are designed and UL Listed for use in both positive and negative grounded applications—one switch can be used on either system.

#### *Ungrounded PV systems*

Somewhat less common today are ungrounded (floating) PV systems. These use transformerless inverters and, relative to the disconnects within the system, both the positive (+) and the negative (–) conductors are switched. Eaton is proud to also offer a series of disconnects (600 Vdc and 1000 Vdc) for ungrounded systems.

#### *Safety*

The incorporation of the modified heavy duty safety switch mechanism provides a visible means of disconnect when the switch handle is in the OFF position. Blade disengagement from the stationary contact can be seen when viewing the switch base.

1

## Features

### *Standard Features*

- UL Listed to the UL 98B standard
- Marked as suitable for NEC 690 PV applications per UL 1741 requirements
- Suitable for use on positive and negative grounded systems, not polarity sensitive
- Bi-directional functionality; will break high-energy DC arc regardless of direction of current flow
- Ampacity range—30, 60, 100, 200 and 400 A
- Clear polycarbonate deadfront shield
- Equipment ground
- NEMA 3R, 4 and 4X stainless steel enclosures
- Flex Center modification available, such as viewing windows, pilot lights and more

### *600 Vdc Specific Features*

- First UL Listed 600 Vdc per pole, bi-directional solution in the market
- 2-, 3-, 4- and 6-circuit configurations for grounded systems
- 1-, 2- and 3-circuit configurations for ungrounded systems
- Fusible and non-fusible
- Grounded configurations include isolated return terminals. Exceptions include 6-circuit 30, 60, 100 A, and 4-circuit 400 A
- Suitable for use on a circuit capable of delivering up to 10,000 A, 600 Vdc

### *1000 Vdc Specific Features*

- 1-, 2- and 3-circuit configurations for both grounded and ungrounded systems
- Fusible and non-fusible
- Factory-installed jumpers
- Grounded configurations include isolated return terminals. Exceptions include 2-circuit 400 A
- Suitable for use on a circuit capable of delivering up to 10,000 A, 1000 Vdc

## Standards and Certifications

Listed to the UL 98B standard in-line with NEC 690 code requirements for PV installations.

## Catalog Number Selection

### DC Disconnects

**DCG 3 06 1 U R M _**

**Class and Type**
- **DCG** = DC disconnect/ grounded system
- **DCU** = DC disconnect/ ungrounded system

**Number of Circuits** ①
- **1** = 1 circuit
- **2** = 2 circuits
- **3** = 3 circuits
- **4** = 4 circuits
- **6** = 6 circuit

**Maximum System Voltage**
- **06** = 600 Vdc
- **10** = 1000 Vdc

**Ampacity**
- **1** = 30 A
- **2** = 60 A
- **3** = 100 A
- **4** = 200 A
- **5** = 400 A

**Protection**
- **F** = Fusible
- **U** = Non-fusible

**NEMA Enclosure Rating**
- **R** = NEMA 3R
- **P** = NEMA 4 (painted steel)
- **W** = NEMA 4X, stainless 304
- **X** = NEMA 4X, stainless 316

**Switch Series**
- **M** = DC photovoltaic applications

**Accessories/Options**
- **Blank** = No accessories
- **2** = 1NO/1NC auxiliary contact
- **3** = 2NO/2NC auxiliary contact
- **W** = Viewing window
- **J** = Factory-converted Class J fuse provisions

***Note***

① Not all configurations for ampere rating and number of circuits are available. All circuit configurations can be found in the product dimension tables.

## Technical Data and Specifications

### DC Disconnect Lug Capacity

| Maximum Vdc System Voltage | Ampere Rating | Lug Capacity ①②③ Main Input | Main Output | Solid Return (for Grounded Conductor) Input | Solid Return Output | Equipment Ground Input | Equipment Ground Output |
|---|---|---|---|---|---|---|---|
| 600 | 30 | #2–#14 AWG | #2–#14 AWG | 1/0–#14 AWG | 1/0–#14 AWG | #4–#14 AWG | #4–#14 AWG |
| | 60 | #2–#14 AWG | #2–#14 AWG | 1/0–#14 AWG | 1/0–#14 AWG | #4–#14 AWG | #4–#14 AWG |
| | 100 | 1/0–#14 AWG | 1/0–#14 AWG | 1/0–#14 AWG | 1/0–#14 AWG | #4–#14 AWG | #4–#14 AWG |
| | 200 | 300 kcmil–#6 | 300 kcmil–#6 | 300 kcmil–#6 | 300 kcmil–#6 | #4–#14 AWG | 1/0–#14 |
| | 400 | (1) 750 kcmil–1/0 and (1) 600 kcmil–#2 | (1) 750 kcmil–1/0 and (1) 600 kcmil–#2 | (2) 750 kcmil–1/0 | (2) 750 kcmil–1/0 | #4–#14 AWG | 250 kcmil–#6 |
| 1000 | 30 | #2–#14 AWG | #2–#14 AWG | #2–#14 AWG | #2–#14 AWG | #4–#14 AWG | #4–#14 AWG |
| | 60 | #2–#14 AWG | #2–#14 AWG | #2–#14 AWG | #2–#14 AWG | #4–#14 AWG | #4–#14 AWG |
| | 100 | 1/0–#14 AWG | 1/0–#14 AWG | 1/0–#14 AWG | 1/0–#14 AWG | #4–#14 AWG | #4–#14 AWG |
| | 200 | 300 kcmil–#6 | 300 kcmil–#6 | 300 kcmil–#6 | 300 kcmil–#6 | #4–#14 AWG | 1/0–#14 |
| | 400 | (1) 750 kcmil–1/0 and (1) 600 kcmil–#2 | (1) 750 kcmil–1/0 and (1) 600 kcmil–#2 | (2) 750 kcmil–1/0 | (2) 750 kcmil–1/0 | #4–#14 AWG | 250 kcmil–#6 |

### 600 Vdc Non-Fusible and Fusible

| | Grounded Systems Number of Circuits | | | | | Ungrounded Systems Number of Circuits | | |
|---|---|---|---|---|---|---|---|---|
| Amperes | 1 | 2 | 3 | 4 | 6 | 1 | 2 | 3 |
| 30 | ● | | ● | | ◆ | ◆ | | ◆ |
| 60 | ● | | ● | | ◆ | ◆ | | ◆ |
| 100 | ● | | ● | | ◆ | ◆ | | ◆ |
| 200 | ● | ● | ● | ● | ● | ◆ | ◆ | ◆ |
| 400 | ● | ● | ● | ■ | | ◆ | ◆ | |
| 600 | ● | | | | | | | |

### 1000 Vdc Non-Fusible and Fusible

| | Grounded Systems Number of Circuits | | | Ungrounded Systems Number of Circuits | | |
|---|---|---|---|---|---|---|
| Amperes | 1 | 2 | 3 | 1 | 2 | 3 |
| 30 | ● | ◆ | | ◆ | ◆ | |
| 60 | ● | ◆ | | ◆ | ◆ | |
| 100 | ● | ◆ | | ◆ | ◆ | |
| 200 | ● | ● | ● | ◆ | ◆ | ◆ |
| 400 | ● | ■ | | ◆ | ◆ | |

***Legend***

- ● Indicates grounded conductor terminal included with isolated lugs for each circuit.
- ◆ Indicates no grounded conductor terminal included.
- ■ Indicates only non-fusible version includes grounded conductor terminal with isolated lug for each circuit.

## Wiring Diagrams

### 600 Vdc/Pole Wiring Diagrams (30–400 A)

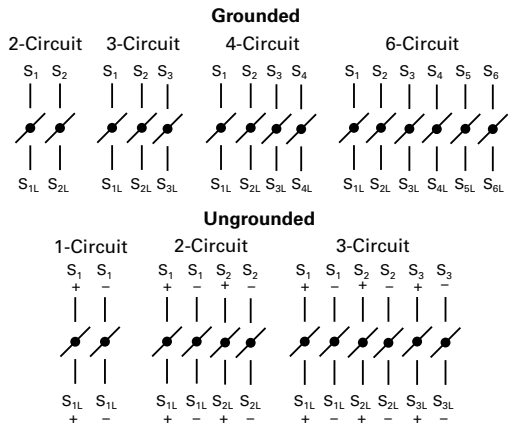


### 1000 Vdc/Pole Wiring Diagrams (30–400 A)

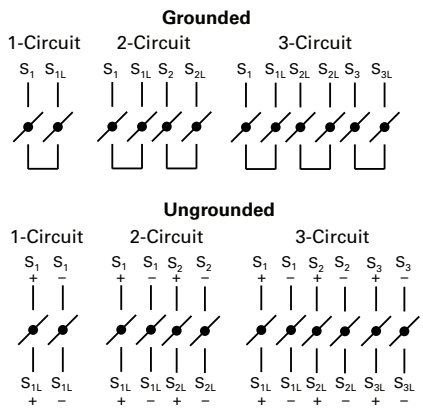


**Note:** Majority of grounded configurations have isolated return terminals. Due to enclosure size limitations, 600 Vdc exceptions include 6-circuit 30, 60, 100 A; 4-circuit 400 A; 1000 Vdc exceptions include 2-circuit 400 A.

***Notes***

① All lug capacities shown are for standard lugs. For options, including compression type, consult factory.
② All lugs are Cu/Al rated.
③ UL 98/98B limits the conductor current sizing to 75 °C. 90 °C wire may be terminated per Article 110.14(C); however, the maximum current capacity is limited to NEC Table 310.16, 75 °C column.

1

## Dimensions

Approximate Dimensions in Inches (mm)

### NEMA Type 3R

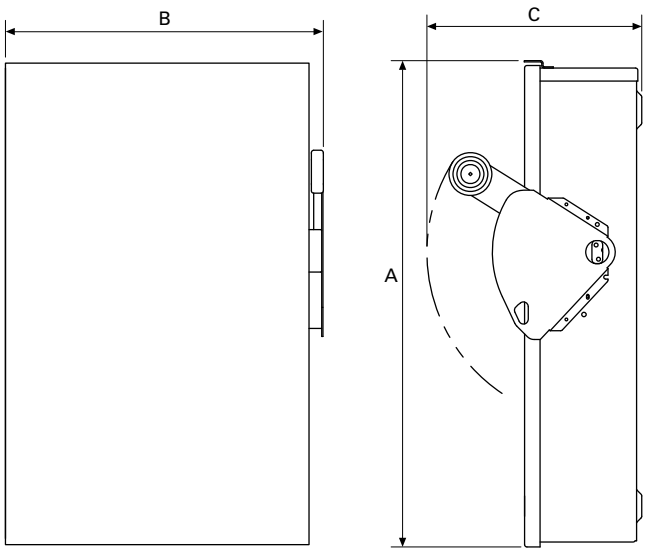


### NEMA Type 4, 4X Stainless

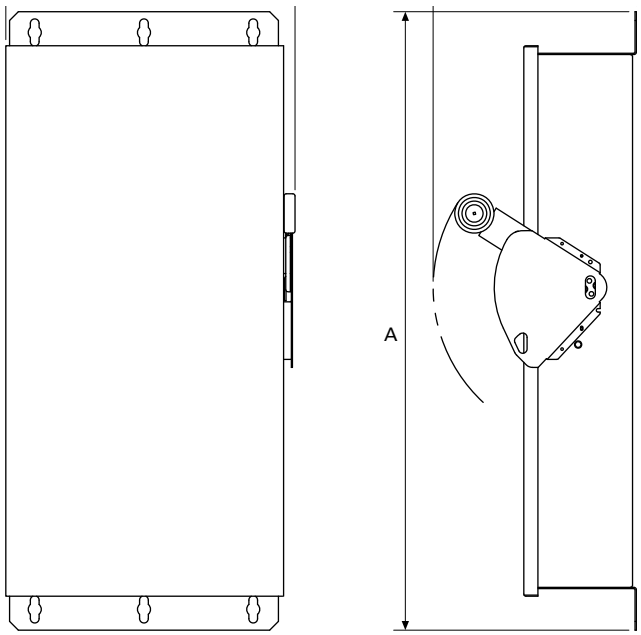


### 600 Vdc Non-Fusible and Fusible

| Ampere Rating | Number of Circuits | NEMA Type 3R ① A | B | C | D | NEMA Types 4, 4X Stainless ① A | B | C | D |
|---|---|---|---|---|---|---|---|---|---|
| **Grounded** | | | | | | | | | |
| 30, 60 | 3 | 16.27 (413.3) | 8.87 (225.3) | 9.89 (251.2) | 5.25 (133.4) | 19.08 (484.6) | 8.76 (222.5) | 10.22 (259.6) | 5.50 (139.7) |
| 30, 60 | 6 | 19.08 (484.6) | 12.88 (327.2) | 10.22 (259.6) | 5.50 (139.7) | 19.08 (484.6) | 12.88 (327.2) | 10.22 (259.6) | 5.50 (139.7) |
| 100 | 3 | 21.99 (558.5) | 11.84 (300.7) | 9.89 (251.2) | 5.25 (133.4) | 24.95 (633.7) | 11.79 (299.5) | 10.22 (259.6) | 5.50 (139.7) |
| 100 | 6 | 24.95 (633.7) | 16.13 (409.7) | 10.22 (259.6) | 5.50 (139.7) | 24.95 (633.7) | 16.13 (409.7) | 10.22 (259.6) | 5.50 (139.7) |
| 200 | 2 | 35.38 (898.7) | 16.54 (420.1) | 11.63 (295.4) | 6.44 (163.6) | 35.38 (898.7) | 16.54 (420.1) | 11.63 (295.4) | 6.44 (163.6) |
| 200 | 3 | 35.38 (898.7) | 16.54 (420.1) | 11.63 (295.4) | 6.44 (163.6) | 35.38 (898.7) | 16.54 (420.1) | 11.63 (295.4) | 6.44 (163.6) |
| 200 | 4 | 35.38 (898.7) | 24.46 (621.3) | 11.63 (295.4) | 6.44 (163.6) | 35.38 (898.7) | 24.46 (621.3) | 11.63 (295.4) | 6.44 (163.6) |
| 200 | 6 | 39.18 (995.2) | 30.18 (766.6) | 11.63 (295.4) | 6.44 (163.6) | 39.18 (995.2) | 30.18 (766.6) | 11.63 (295.4) | 6.44 (163.6) |
| 400 ② | 2 | 57.47 (1459.7) | 24.12 (612.6) | 12.43 (315.7) | 7.19 (182.6) | 57.47 (1459.7) | 24.12 (612.6) | 12.43 (315.7) | 7.19 (182.6) |
| 400 ② | 3 | 57.47 (1459.7) | 24.12 (612.6) | 12.43 (315.7) | 7.19 (182.6) | 57.47 (1459.7) | 24.12 (612.6) | 12.43 (315.7) | 7.19 (182.6) |
| 400 ② | 4 | 57.47 (1459.7) | 24.12 (612.6) | 12.43 (315.7) | 7.19 (182.6) | 57.47 (1459.7) | 24.12 (612.6) | 12.43 (315.7) | 7.19 (182.6) |
| **Ungrounded** | | | | | | | | | |
| 30, 60 | 1 | 16.27 (413.3) | 8.87 (225.3) | 9.89 (251.2) | 5.25 (133.4) | 19.08 (484.6) | 8.76 (222.5) | 10.22 (259.6) | 5.50 (139.7) |
| 30, 60 | 3 | 19.08 (484.6) | 12.88 (327.2) | 10.22 (259.6) | 5.50 (139.7) | 19.08 (484.6) | 12.88 (327.2) | 10.22 (259.6) | 5.50 (139.7) |
| 100 | 1 | 21.99 (558.5) | 11.84 (300.7) | 9.89 (251.2) | 5.25 (133.4) | 24.95 (633.7) | 11.79 (299.5) | 10.22 (259.6) | 5.50 (139.7) |
| 100 | 3 | 24.95 (633.7) | 16.13 (409.7) | 10.22 (259.6) | 5.50 (139.7) | 24.95 (633.7) | 16.13 (409.7) | 10.22 (259.6) | 5.50 (139.7) |
| 200 | 1 | 35.38 (898.7) | 16.54 (420.1) | 11.63 (295.4) | 6.44 (163.6) | 35.38 (898.7) | 16.54 (420.1) | 11.63 (295.4) | 6.44 (163.6) |
| 200 | 2 | 35.38 (898.7) | 16.54 (420.1) | 11.63 (295.4) | 6.44 (163.6) | 35.38 (898.7) | 16.54 (420.1) | 11.63 (295.4) | 6.44 (163.6) |
| 200 | 3 | 35.38 (898.7) | 24.46 (621.3) | 11.63 (295.4) | 6.44 (163.6) | 35.38 (898.7) | 24.46 (621.3) | 11.63 (295.4) | 6.44 (163.6) |
| 400 ② | 1 | 57.47 (1459.7) | 24.12 (612.6) | 12.43 (315.7) | 7.19 (182.6) | 57.47 (1459.7) | 24.12 (612.6) | 12.43 (315.7) | 7.19 (182.6) |
| 400 ② | 2 | 57.47 (1459.7) | 24.12 (612.6) | 12.43 (315.7) | 7.19 (182.6) | 57.47 (1459.7) | 24.12 (612.6) | 12.43 (315.7) | 7.19 (182.6) |

***Notes***

① NEMA Type 4 and 4X stainless steel enclosures are suitable for mounting in either vertical or horizontal positions. NEMA Type 3R enclosures must be mounted vertically.

② For smaller NEMA 3R enclosure, consult factory.

Approximate Dimensions in Inches (mm)

## 1000 Vdc Non-Fusible (Fusible Available at 200 A and 400 A)

| Ampere Rating | Number of Circuits | NEMA Type 3R ① A | B | C | D | NEMA Types 4, 4X Stainless ① A | B | C | D |
|---|---|---|---|---|---|---|---|---|---|
| **Grounded** | | | | | | | | | |
| 30, 60 | 1 | 16.27 (413.3) | 8.87 (225.3) | 9.89 (251.2) | 5.25 (133.4) | 14.14 (359.2) | 8.76 (222.5) | 10.22 (259.6) | 5.50 (139.7) |
| 30, 60 | 2 | 19.08 (484.6) | 12.88 (327.2) | 10.22 (259.6) | 5.50 (139.7) | 19.08 (484.6) | 12.88 (327.2) | 10.22 (259.6) | 5.50 (139.7) |
| 100 | 1 | 21.99 (558.5) | 11.84 (300.7) | 9.89 (251.2) | 5.25 (133.4) | 24.95 (633.7) | 11.79 (299.5) | 10.22 (259.6) | 5.50 (139.7) |
| 100 | 2 | 24.95 (633.7) | 16.13 (409.7) | 10.22 (259.6) | 5.50 (139.7) | 24.95 (633.7) | 16.13 (409.7) | 10.22 (259.6) | 5.50 (139.7) |
| 200 | 1 | 35.38 (898.7) | 16.95 (430.5) | 11.63 (295.4) | 6.44 (163.6) | 35.38 (898.7) | 16.95 (430.5) | 11.63 (295.4) | 6.44 (163.6) |
| 200 | 2 | 35.38 (898.7) | 24.57 (624.1) | 11.63 (295.4) | 6.44 (163.6) | 35.38 (898.7) | 24.57 (624.1) | 11.63 (295.4) | 6.44 (163.6) |
| 200 | 3 | 35.38 (898.7) | 24.57 (624.1) | 11.63 (295.4) | 6.44 (163.6) | 35.38 (898.7) | 24.57 (624.1) | 11.63 (295.4) | 6.44 (163.6) |
| 400 ② | 1 | 57.47 (1459.7) | 24.12 (612.6) | 12.43 (315.7) | 7.19 (182.6) | 57.47 (1459.7) | 24.12 (612.6) | 12.43 (315.7) | 7.19 (182.6) |
| 400 ② | 2 | 57.47 (1459.7) | 24.12 (612.6) | 12.43 (315.7) | 7.19 (182.6) | 57.47 (1459.7) | 24.12 (612.6) | 12.43 (315.7) | 7.19 (182.6) |
| **Ungrounded** | | | | | | | | | |
| 30, 60 | 1 | 16.27 (413.3) | 8.87 (225.3) | 9.89 (251.2) | 5.25 (133.4) | 14.14 (359.2) | 8.76 (222.5) | 10.22 (259.6) | 5.50 (139.7) |
| 30, 60 | 2 | 19.08 (484.6) | 12.88 (327.2) | 10.22 (259.6) | 5.50 (139.7) | 19.08 (484.6) | 12.88 (327.2) | 10.22 (259.6) | 5.50 (139.7) |
| 100 | 1 | 21.99 (558.5) | 11.84 (300.7) | 9.89 (251.2) | 5.25 (133.4) | 24.95 (633.7) | 11.79 (299.5) | 10.22 (259.6) | 5.50 (139.7) |
| 100 | 2 | 24.95 (633.7) | 16.13 (409.7) | 10.22 (259.6) | 5.50 (139.7) | 24.95 (633.7) | 16.13 (409.7) | 10.22 (259.6) | 5.50 (139.7) |
| 200 | 1 | 35.38 (898.7) | 16.54 (420.1) | 11.63 (295.4) | 6.44 (163.6) | 35.38 (898.7) | 16.54 (420.1) | 11.63 (295.4) | 6.44 (163.6) |
| 200 | 2 | 35.38 (898.7) | 16.54 (420.1) | 11.63 (295.4) | 6.44 (163.6) | 35.38 (898.7) | 16.54 (420.1) | 11.63 (295.4) | 6.44 (163.6) |
| 200 | 3 | 35.38 (898.7) | 24.46 (621.3) | 11.63 (295.4) | 6.44 (163.6) | 35.38 (898.7) | 24.46 (621.3) | 11.63 (295.4) | 6.44 (163.6) |
| 400 ② | 1 | 57.47 (1459.7) | 24.12 (612.6) | 12.43 (315.7) | 7.19 (182.6) | 57.47 (1459.7) | 24.12 (612.6) | 12.43 (315.7) | 7.19 (182.6) |
| 400 ② | 2 | 57.47 (1459.7) | 24.12 (612.6) | 12.43 (315.7) | 7.19 (182.6) | 57.47 (1459.7) | 24.12 (612.6) | 12.43 (315.7) | 7.19 (182.6) |

***Notes***

① NEMA Type 4 and 4X stainless steel enclosures are suitable for mounting in either vertical or horizontal positions. NEMA Type 3R enclosures must be mounted vertically.

② For smaller NEMA 3R enclosure, consult factory.

Solar Disconnects 1500 Vdc

## Contents


| *Description* | *Page* |
|---|---|
| DC Disconnect Switches | |
| Solar Disconnects 1500 Vdc | |
| Product Selection | **V2-T1-85** |
| Dimensions | **V2-T1-85** |


## Solar Disconnects 1500 Vdc

### Product Description

Eaton's renewable energy switches are rated for bidirectional flow of power as well as for increased DC voltages required with higher-rated inverters. Additionally, their heavy-duty safety switch design protects people, property and investment, and their proven reliability can meet your current and future energy transition needs.

### Features

***Standard Features***

- Viewing window
- Enhanced visible blade (EUSERC compliant)
- Full line shield
- Loadbreak rated
- Visible ON/OFF indication
- Padlockable in the OFF position
- 1500 Vdc, 200 A and 400 A

***Optional Features/Accessories***

- Multi-tap lugs
- Additional grounding
- Custom painted enclosures
- Auxiliary contacts
- Voltage indicators/testers
- Lock-on provision

### Standards and Certifications

- UL listed for reverse power flow

Listed

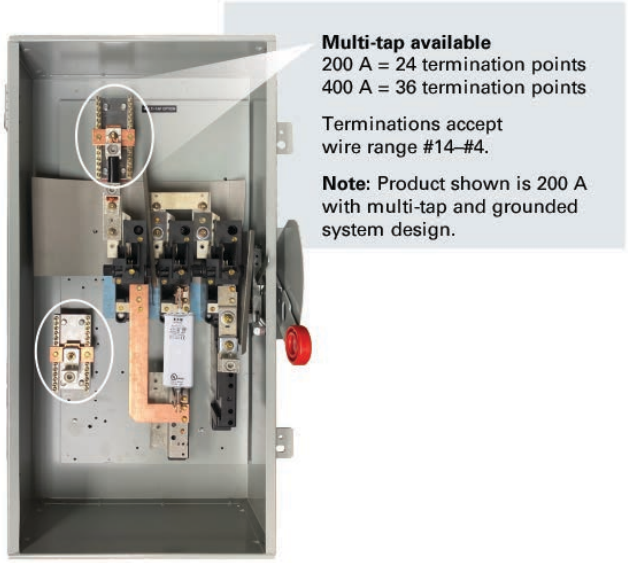

## Product Selection

### 1500 Vdc, Single-circuit, Enhanced Visible Blade

| Catalog Number | Ampere Rating | Protection | NEMA Rating | Fuse Type | Short-Circuit Current Rating | Lug Capacity ① | Wire Type |
|---|---|---|---|---|---|---|---|
| **Grounded System** | | | | | | | |
| **DCG1154UDM-000W** | 200 | Non-fusible | 12/3R | — | 10 kA | #6–300 kcmil | Cu/Al |
| **DCG1154UWM-000W** | 200 | Non-fusible | 4X ② | — | 10 kA | | |
| **DCG1155UDM-000W** | 400 | Non-fusible | 12/3R | — | 10 kA | (1) 1/0–750 kcmil and (1) 2/0–600 kcmil | Cu/Al |
| **DCG1155UWM-000W** | 400 | Non-fusible | 4X ② | — | 10 kA | | |
| **DCG1154FDM-000W** | 200 | Fusible | 12/3R | 2XL | 30 kA | #6–300 kcmil | Cu/Al |
| **DCG1154FWM-000W** | 200 | Fusible | 4X ② | 2XL | 30 kA | | |
| **DCG1155FDM-000W** | 400 | Fusible | 12/3R | 3L | 30 kA | (1) 1/0–750 kcmil and (1) 2/0–600 kcmil | Cu/Al |
| **DCG1155FWM-000W** | 400 | Fusible | 4X ② | 3L | 30 kA | | |
| **Ungrounded System** | | | | | | | |
| **DCU1154UDM-000W** | 200 | Non-fusible | 12/3R | — | 10 kA | #6–300 kcmil | Cu/Al |
| **DCU1154UWM-000W** | 200 | Non-fusible | 4X ② | — | 10 kA | | |
| **DCU1155UDM-000W** | 400 | Non-fusible | 12/3R | — | 10 kA | (1) 1/0–750 kcmil and (1) 2/0–600 kcmil | Cu/Al |
| **DCU1155UWM-000W** | 400 | Non-fusible | 4X ② | — | 10 kA | | |
| **DCU1154FDM-000W** | 200 | Fusible | 12/3R | 2XL | 30 kA | #6–300 kcmil | Cu/Al |
| **DCU1154FWM-000W** | 200 | Fusible | 4X ② | 2XL | 30 kA | | |
| **DCU1155FDM-000W** | 400 | Fusible | 12/3R | 3L | 30 kA | (1) 1/0–750 kcmil and (1) 2/0–600 kcmil | Cu/Al |
| **DCU1155FWM-000W** | 400 | Fusible | 4X ② | 3L | 30 kA | | |

### Bussmann XL PV 1500 Vdc Fuses (Customer Provided)

UL listed, guide JFGA, file E335324. Photovoltaic to UL 248-19.

| Fuse Size | Bladed Version | Ampere Rating | Voltage Rating (Vdc) |
|---|---|---|---|
| **200 A** | | | |
| 2 | **PV-125A-2XL-15** | 125 | 1500 |
| | **PV-160A-2XL-15** | 160 | 1500 |
| | **PV-200A-2XL-15** | 200 | 1500 |
| **400 A** | | | |
| 3 | **PV-250A-3L-15** | 250 | 1500 |
| | **PV-315A-3L-15** | 315 | 1500 |
| | **PV-355A-3L-15** | 355 | 1500 |
| | **PV-400A-3L-15** | 400 | 1500 |

## Dimensions

Dimensions in Inches (mm)

| Ampere Rating | Width | Height | Depth ($D_1$) | Depth ($D_2$) | Weight lb (kg) |
|---|---|---|---|---|---|
| **NEMA 12/3R** | | | | | |
| 200 | 16.95 (430.5) | 35.38 (898.7 | 11.63 (295.4) | 7.27 (184.7) | 62 (28) |
| 400 | 24.12 (612.6) | 57.47 (1459.7) | 12.43 (320.8) | 8.15 (207.0) | 130 (59) |
| **NEMA 4X Stainless Steel** | | | | | |
| 200 | 16.95 (430.5) | 35.38 (898.7 | 11.63 (295.4) | 7.27 (184.7) | 71 (32) |
| 400 | 24.12 (612.6) | 57.47 (1459.7) | 12.43 (320.8) | 8.15 (207.0) | 145 (66) |

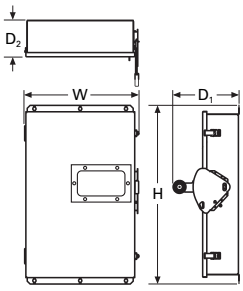


***Notes***

① For applications that require multiple lugs (multi-tap), contact the Flex Center at FlexSwitches@eaton.com or call 888-329-9272.

② Stainless steel, 304 (316 available via the Flex Center).

DH361FWK-GCL

## Contents


| *Description* | *Page* |
|---|---|
| Product Overview | **V2-T1-2** |
| General-Duty | **V2-T1-25** |
| Heavy-Duty | **V2-T1-30** |
| Heavy-Duty Double-Door Safety Switch | **V2-T1-41** |
| Six-Pole Switches | **V2-T1-45** |
| Double-Throw Switches | **V2-T1-48** |
| EnviroLine Stainless Steel Switch | **V2-T1-55** |
| Window Switches | **V2-T1-59** |
| Receptacle Switches | **V2-T1-62** |
| Non-Metallic KRYDON Switch | **V2-T1-64** |
| Shunt Trip Safety Switch | **V2-T1-67** |
| NEMA 7/9—Hazardous Location Disconnect Switch | **V2-T1-70** |
| Quick-Connect Switches | **V2-T1-72** |
| DC Disconnect Switches | **V2-T1-77** |
| Mill-Duty Rated, Heavy-Duty Safety Switch Product Selection | **V2-T1-87** |
| Elevator Control Switch | **V2-T1-88** |
| Auxiliary Power Heavy-Duty Safety Switch | **V2-T1-91** |
| Left-Handed Safety Switch | **V2-T1-95** |
| Heavy-Duty Surge Switch | **V2-T1-96** |
| EZ Isolator™ (OLI) Switch | **V2-T1-98** |
| Pringle Bolted Pressure Switch | |
| Type DS, Fusible and Non-Fusible | **V2-T1-104** |
| Type Visi-Flex DE-ION | **V2-T1-107** |
| Flange Mounted—Variable Depth | **V2-T1-111** |
| Flange Mounted—Fixed Depth | **V2-T1-115** |


## Mill-Duty Rated, Heavy-Duty Safety Switch

### Product Description

This heavy-duty, single-throw safety switch is rated 240 V, 600 Vac, 30–600 A, fusible and non-fusible.

- Horsepower rated
- Suitable for service entrance use
- Factory-installed copper ground lug
- Copper terminal lugs
- Fuse pullers through 200 A
- For factory modifications, refer to **Page V2-T1-15**

### Standards and Certifications

- UL listed File No. E5239

Listed

### *Seismic Qualifications*

- Heavy-duty switches exceed the requirements of Uniform Building Code (UBC) and California Code Title 24 OSP-0011-10, OSP-0012-10

## Product Selection

DH361FWK-GCL

### Fusible

| System | Ampere Rating | Fuse Class Provision | Maximum Horsepower Ratings with Time Delay Fuses — AC — Standard Fuse — Single-Phase | AC — Standard Fuse — Three-Phase | AC — Time Delay — Single-Phase | AC — Time Delay — Three-Phase | DC — 250 V | DC — 600 V | NEMA 12/3R Enclosure Industrial, Dust-Tight Catalog Number | NEMA 4X Enclosure Corrosion-Resistant, Stainless Steel Catalog Number |
|---|---|---|---|---|---|---|---|---|---|---|
| **Three-Pole—240 Vac, 250 Vdc (Suitable for Service Entrance Use with a Neutral Kit Installed) ①** | | | | | | | | | | |
| 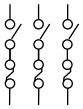 | 30 | H | 1-1/2 | 3 | — | 7-1/2 | — | — | **DH321FDK-GCL ②** | **DH321FWK-GCL** |
| | 60 | H | 3 | 7-1/2 | — | 15 | — | — | **DH322FDK-GCL ②** | **DH322FWK-GCL** |
| | 100 | H | 7-1/2 | 15 | — | 30 | 20 | — | **DH323FDK-GCL ②** | ③ |
| | 200 | H | 15 | 25 | — | 60 | 40 | — | **DH324FDK-GCL ②** | **DH324FWK-GCL** |
| | 400 | H | — | 50 | — | 125 | 50 | — | **DH325FDK-GCL ②** | **DH325FWK-GCL** |
| | 600 | H | — | 75 | — | 200 | — | — | **DH326FDK-GCL ②** | **DH326FWK-GCL** |
| **Two-Pole—480 Vac—600 Vac or DC ⑤ (Suitable for Service Entrance Use with a Neutral Kit Installed) ①** | | | | | | | | | | |
| 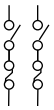 | 30 | H | 7-1/2 | 10 | — | — | — | 15 | **DH261FDK-GCL ②** | **DH261FWK-GCL** |
| | 60 | H | 20 | 25 | — | — | — | 25 | **DH262FDK-GCL ②** | ③ **or** ④ |
| | 100 | H | 30 | 40 | — | — | — | 25 | **DH263FDK-GCL ②** | ③ **or** ④ |
| | 200 | H | 50 | 50 | — | — | — | 50 | **DH264FDK-GCL ②** | **DH264FWK-GCL** |
| **Three-Pole—480 Vac—600 Vac, 250 Vdc (Suitable for Service Entrance Use with a Neutral Kit Installed) ①** | | | | | | | | | | |
| 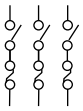 | 30 | H | 7-1/2 | 10 | 15 | 20 | — | — | **DH361FDK-GCL ②** | **DH361FWK-GCL** |
| | 60 | H | 20 | 25 | 30 | 50 | — | — | **DH362FDK-GCL ②** | **DH362FWK-GCL** |
| | 100 | H | 30 | 40 | 60 | 75 | — | — | **DH363FDK-GCL ②** | **DH363FWK-GCL** |
| | 200 | H | 50 | 50 | 125 | 150 | — | — | **DH364FDK-GCL ②** | **DH364FWK-GCL** |
| | 400 | H | — | — | 250 | 350 | — | — | **DH365FDK-GCL ②** | **DH365FWK-GCL** |
| | 600 | H | — | — | 400 | 500 | — | — | **DH366FDK-GCL ②** | **DH366FWK-GCL** |

### Non-Fusible 277/480–600 V

| System | Ampere Rating | Fuse Class Provision | Maximum Horsepower Ratings — AC — Standard Fuse — Single-Phase | AC — Standard Fuse — Three-Phase | AC — Time Delay — Single-Phase | AC — Time Delay — Three-Phase | DC — 250 V | DC — 600 V | NEMA 12/3R Enclosure Industrial, Dust-Tight Catalog Number | NEMA 4X Enclosure Corrosion-Resistant, Stainless Steel Catalog Number |
|---|---|---|---|---|---|---|---|---|---|---|
| **Three-Pole—480 Vac—600 Vac, 250 Vdc ⑥ (Suitable for Service Entrance use with a Neutral Kit Installed) ①** | | | | | | | | | | |
| | 30 | — | 7-1/2 | 10 | 20 | 30 | 5 | — | **DH361UDK-GCL ②** | **DH361UWK-GCL** |
| | 60 | — | 20 | 25 | 50 | 60 | 10 | — | **DH362UDK-GCL ②** | **DH362UWK-GCL** |
| | 100 | — | 40 | 50 | 75 | 100 | 20 | — | **DH363UDK-GCL ②** | **DH363UWK-GCL** |
| | 200 | — | 50 | 50 | 125 | 150 | 40 | — | **DH364UDK-GCL ②** | **DH364UWK-GCL** |
| | 400 | — | — | — | 250 | 350 | 50 | — | **DH365UDK-GCL ②** | **DH365UWK-GCL** |
| | 600 | — | — | — | 400 | 500 | — | — | **DH366UDK-GCL ②** | **DH366UWK-GCL** |

***Notes***

① Contact the Safety Switch Flex Center at FlexSwitches@eaton.com for copper neutrals.
② NEMA 12/3R enclosures (30–1200 A) can be field modified to meet NEMA 3R rainproof requirements when a factory-provided drain hole is opened.
③ Contact the Safety Switch Flex Center at FlexSwitches@eaton.com for availability of this product.
④ Use three-pole catalog numbers below for 600 Vac, 250 Vdc maximum applications. For 600 Vdc, see note ③.
⑤ DC rating for 400–600 A switches is 250 V.
⑥ For two-pole applications, use outside poles of three-pole switch.

**Elevator Control Switch**

## Contents


| *Description* | *Page* |
|---|---|
| Product Overview | **V2-T1-2** |
| General-Duty | **V2-T1-25** |
| Heavy-Duty | **V2-T1-30** |
| Heavy-Duty Double-Door Safety Switch | **V2-T1-41** |
| Six-Pole Switches | **V2-T1-45** |
| Double-Throw Switches | **V2-T1-48** |
| EnviroLine Stainless Steel Switch | **V2-T1-55** |
| Window Switches | **V2-T1-59** |
| Receptacle Switches | **V2-T1-62** |
| Non-Metallic KRYDON Switch | **V2-T1-64** |
| Shunt Trip Safety Switch | **V2-T1-67** |
| NEMA 7/9—Hazardous Location Disconnect Switch | **V2-T1-70** |
| Quick-Connect Switches | **V2-T1-72** |
| DC Disconnect Switches | **V2-T1-77** |
| Mill-Duty Rated, Heavy-Duty Safety Switch | **V2-T1-86** |
| Elevator Control Switch | |
| Catalog Number Selection | **V2-T1-89** |
| Technical Data and Specifications | **V2-T1-89** |
| Dimensions | **V2-T1-90** |
| Auxiliary Power Heavy-Duty Safety Switch | **V2-T1-91** |
| Left-Handed Safety Switch | **V2-T1-95** |
| Heavy-Duty Surge Switch | **V2-T1-96** |
| EZ Isolator™ (OLI) Switch | **V2-T1-98** |
| Pringle Bolted Pressure Switch | **V2-T1-101** |
| Type DS, Fusible and Non-Fusible | **V2-T1-104** |
| Type Visi-Flex DE-ION | **V2-T1-107** |
| Flange Mounted—Variable Depth | **V2-T1-111** |
| Flange Mounted—Fixed Depth | **V2-T1-115** |


## Elevator Control Switch

### Features, Benefits and Functions

***Standard Features***

- 30–400 A, 600 Vac three-phase fused power switch
- 200,000 A rms short-circuit current rating
- Shunt trip 120 V
- Control power terminal block
- Ground lug per NEC
- Class J Fuse mounting only (Class J Fuses not included)
- Key to test switch 120 V
- Mechanically interlocked auxiliary contact for hydraulic elevators with automatic recall (5 A, 120 Vac rated) 1NO, 1NC

***Optional Features***

- Control power transformer with fuses and blocks
- Fire safety interface relay
- Pilot light—ON
- Isolated neutral lug (oversized 200% rated neutral option available where required by excessive nonlinear loads)
- Fire alarm voltage monitoring relay (to monitor shunt trip voltage)
- NEMA 3R, 4 and 12 enclosures available through 200 A
- For added protection, use Eaton fuse covers to improve maintenance and personnel protection, through 200 A (OSHA 1910.333, Paragraph C)

### Standards and Certifications

- UL 98 Enclosed and Deadfront Switch Guide 96NK3917, File No. E182262
- NEMA 1, UL 50, listed enclosure
- cUL® per Canadian Standards C22.2, No. 0-M91-CAN/CSA® C22.2, No. 4-M89 Enclosed Switch

Listed

***Seismic Qualifications***

- Heavy-duty switches exceed the requirements of Uniform Building Code (UBC) and California Code Title 24 OSP-0011-10, OSP-0012-10

## Catalog Number Selection

### Elevator Control Switch

**ES 1 T2 R2 G F1 3 N B _ _**

**Prefix**
**ES** = Elevator control switch

**Ampere Rating**
**1** = 30 A
**2** = 60 A
**3** = 100 A
**4** = 200 A
**5** = 400 A

**Control Transformer**
**T2** = 208 V
**T3** = 240 V
**T1** = 480 V
**T4** = 600 V

**Fire Safety Interface Relay (3PDT, 10 A, 120 V)**
**R2** = 24 Vdc coil
**R1** = 120 Vac coil

**Pilot Light ON**
**G** = Green
**R** = Red
**W** = White

**Fire Alarm Voltage Monitoring Relay (To Monitor Shunt Trip Voltage)**
**F1** = Single-pole
**F3** = Three-pole ①

**Enclosure Options (NEMA 1 Standard With No Suffix Designation Required)**
**3** = NEMA 3R
**D** = NEMA 12
**P** = NEMA 4 painted steel

**Neutral Lug**
**N** = Isolated full capacity

**Auxiliary Contacts ② and Surge Protection ③**
**Blank** = None
**B** = Additional 1NO/1NC Auxiliary Contacts
**C** = Surge Protection ③
**E** = Additional 1NO/1NC Auxiliary Contact and Surge Protection ③

**Key to Test**
**Blank** = Includes key to test
**X** = Omit ④

**Options/ Modifications ⑤**
**Blank** = No mods
**SS** = 304 stainless steel
**NP** = Nameplate

### Catalog Number Example: ES3T1R1GF3

- 100 A S.T. switch 480V-3P—ES3
- 480–120 V CPT—T1
- 120 Vac coil fire safety interface relay—R1
- Pilot light—ON (Green)—G
- Fire alarm voltage monitoring relay (three-pole)—F3

## Technical Data and Specifications

### Elevator Control Switch Maximum hp Rating—Sizing Based on Motor Type

| Voltage Rating (Vac Three-Phase) | Ampere Rating 30 A, ES1 A | B | C | 60 A, ES2 A | B | C | 100 A, ES3 A | B | C | 200 A, ES4 A | B | C | 400 A, ES5 A | B | C |
|---|---|---|---|---|---|---|---|---|---|---|---|---|---|---|---|
| 208 | 5 | 5 | 3 | 10 | 10 | 10 | 20 | 15 | 15 | 40 | 40 | 30 | — | — | — |
| 240 | 5 | 5 | 5 | 10 | 10 | 10 | 20 | 20 | 15 | 50 | 40 | 30 | — | — | — |
| 480 | 10 | 10 | 10 | 30 | 25 | 20 | 50 | 40 | 30 | 100 | 75 | 75 | — | — | — |
| 600 | 15 | 15 | 10 | 30 | 30 | 25 | 60 | 50 | 40 | 125 | 100 | 100 | — | — | — |

***Notes***

① F3 Option only available with R1 relay selection.
② All Elevator Control Switches come with 1NO/1NC auxiliary contact as standard.
③ For specific information on Eaton's SP1 surge protective devices, refer to Product Aid PA01005006E.
④ Required by some codes in Arizona.
⑤ Not in Bid Manager® but available through the Flex Center (FlexSwitches@Eaton.com or 1-888-329-9272).

1

## Dimensions

Approximate Dimensions in Inches (mm)

**Note:** Dimensions are for estimating purposes only.

### Elevator Control Switch Dimensions and Lug Data

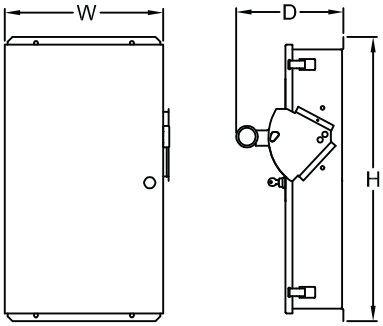


| Ampere Rating | NEMA 1 ① Height | Width | Depth | NEMA 3R, 12 ② Height | Width | Depth | Catalog Number |
|---|---|---|---|---|---|---|---|
| 30 | 29.62 (752.3) | 16.35 (415.4) | 11.18 (283.9) | 29.62 (752.3) | 16.35 (415.4) | 11.18 (283.9) | **ES1** |
| 60 | 29.62 (752.3) | 16.35 (415.4) | 11.18 (283.9) | 29.62 (752.3) | 16.35 (415.4) | 11.18 (283.9) | **ES2** |
| 100 | 29.62 (752.3) | 16.35 (415.4) | 11.18 (283.9) | 29.62 (752.3) | 16.35 (415.4) | 11.18 (283.9) | **ES3** |
| 200 | 32.63 (828.9) | 20.38 (517.8) | 11.28 (286.4) | 32.63 (828.9) | 20.38 (517.8) | 11.28 (286.4) | **ES4** |
| 400 | 54.63 (1387.7) | 25.21 (640.3) | 12.69 (322.3) | 54.63 (1387.7) | 25.21 (640.3) | 12.69 (322.3) | **ES5** |

### Lug Data

| Ampere Rating | Line Side Lug Range | Load Side Lug Range |
|---|---|---|
| 30 | #14–1/0 | #14–#2 |
| 60 | #14–1/0 | #14–#2 |
| 100 | #14–1/0 | #14–1/0 |
| 200 | #4–4/0 | #4–300 kcmil |
| 400 | (2) #2–500 kcmil | (2) 1/0–300 kcmil or<br>(1) 1/0–750 kcmil |

***Notes***

① Standard oversize enclosure to mount control power transformer fire safety interface relay and control terminal blocks.

② Contact factory for dimensions for NEMA 4 enclosure.

DH323FRKA1240

## Contents


| *Description* | *Page* |
|---|---|
| Product Overview | **V2-T1-2** |
| General-Duty | **V2-T1-25** |
| Heavy-Duty | **V2-T1-30** |
| Heavy-Duty Double-Door Safety Switch | **V2-T1-41** |
| Six-Pole Switches | **V2-T1-45** |
| Double-Throw Switches | **V2-T1-48** |
| EnviroLine Stainless Steel Switch | **V2-T1-55** |
| Window Switches | **V2-T1-59** |
| Receptacle Switches | **V2-T1-62** |
| Non-Metallic KRYDON Switch | **V2-T1-64** |
| Shunt Trip Safety Switch | **V2-T1-67** |
| NEMA 7/9—Hazardous Location Disconnect Switch | **V2-T1-70** |
| Quick-Connect Switches | **V2-T1-72** |
| DC Disconnect Switches | **V2-T1-77** |
| Mill-Duty Rated, Heavy-Duty Safety Switch | **V2-T1-86** |
| Elevator Control Switch | **V2-T1-88** |
| Auxiliary Power Heavy-Duty Safety Switch | |
| Catalog Number Selection | **V2-T1-92** |
| Product Selection | **V2-T1-92** |
| Dimensions | **V2-T1-94** |
| Left-Handed Safety Switch | **V2-T1-95** |
| Heavy-Duty Surge Switch | **V2-T1-96** |
| EZ Isolator™ (OLI) Switch | **V2-T1-96** |
| Pringle Bolted Pressure Switch | **V2-T1-101** |
| Type DS, Fusible and Non-Fusible | **V2-T1-104** |
| Type Visi-Flex DE-ION | **V2-T1-107** |
| Flange Mounted—Variable Depth | **V2-T1-111** |
| Flange Mounted—Fixed Depth | **V2-T1-115** |


## Auxiliary Power Heavy-Duty Safety Switch

### Product Description

NEC Article 210.63 requires that a 125 V, single-phase, 15 or 20 A rated receptacle outlet be installed at an accessible location for the servicing of heating, air-conditioning and refrigeration equipment. The receptacle must be located on the same level and within 25 ft (7.5 m) of the heating, air-conditioning and refrigeration equipment. Eaton's heavy-duty safety switch is an ideal solution for these applications, including elimination of the need for running a separate 120 V circuit to the rooftop.

### Features

- 30–200 A
- Horsepower rated
- NEMA 3R outdoor enclosure standard
- 15A ground fault receptacle standard

### Standards and Certifications

- UL listed File No. E5239

Listed

#### *Seismic Qualifications*

- Heavy-duty switches exceed the requirements of Uniform Building Code (UBC) and California Code Title 24 OSP-0011-10, OSP-0012-10

1

## Catalog Number Selection

### Auxiliary Power Heavy-Duty Safety Switch

**DH 3 6 1 F R K A1 480**

**Switch Type**
**DH** = Heavy-duty

**Poles/Blades**
**3** = Three-pole

**Voltage**
**2** = 240 Vac
**6** = 600 Vac

**Amperes**
**1** = 30 A
**2** = 60 A
**3** = 100 A
**4** = 200 A

**Fusible/Non-Fusible or Neutral**
**F** = Fusible without neutral
**U** = Non-fusible
**N** = Fusible with neutral

**NEMA Enclosure Ratings**
**R** = NEMA 3R

**Series**
**K** = Design—All general-duty switches above 200 A and all heavy-duty switches incorporate K-Series switch design features listed on the following page

**GFI Receptacle**
**A1** = 15 A
**A2** = 20 A

**Auxiliary Circuit Voltage**
**208** = 208 V
**240** = 240 V
**480** = 480 V
**600** = 600 V

## Product Selection

### Non-Fusible 240 Vac–600 Vac—Three-Pole

| Ampere Rating | Maximum Horsepower Ratings Single-Phase AC 240 V | 480 V | 600 V | Three-Phase AC 240 V | 480 V | 600 V | 15 A GFI Receptacle Catalog Number | 20 A GFI Receptacle Catalog Number |
|---|---|---|---|---|---|---|---|---|
| **208 Vac Auxiliary Circuit Voltage** | | | | | | | | |
| 30 | — | — | — | — | — | — | **DH321URKA1208** | **DH321URKA2208** |
| 60 | — | — | — | — | — | — | **DH322URKA1208** | **DH322URKA2208** |
| 100 | — | — | — | — | — | — | **DH323URKA1208** | **DH323URKA2208** |
| 200 | — | — | — | — | — | — | **DH324URKA1208** | **DH324URKA2208** |
| **240 Vac Auxiliary Circuit Voltage** | | | | | | | | |
| 30 | 3 | — | — | 10 | — | — | **DH321URKA1240** | **DH321URKA2240** |
| 60 | 10 | — | — | 20 | — | — | **DH322URKA1240** | **DH322URKA2240** |
| 100 | 20 | — | — | 40 | — | — | **DH323URKA1240** | **DH323URKA2240** |
| 200 | 15 | — | — | 60 | — | — | **DH324URKA1240** | **DH324URKA2240** |
| **480 Vac Auxiliary Circuit Voltage** | | | | | | | | |
| 30 | 3 | 7-1/2 | 10 | 10 | 20 | 30 | **DH361URKA1480** | **DH361URKA2480** |
| 60 | 10 | 20 | 25 | 20 | 50 | 60 | **DH362URKA1480** | **DH362URKA2480** |
| 100 | 20 | 40 | 50 | 40 | 75 | 100 | **DH363URKA1480** | **DH363URKA2480** |
| 200 | 15 | 50 | 50 | 60 | 125 | 150 | **DH364URKA1480** | **DH364URKA2480** |
| **600 Vac Auxiliary Circuit Voltage** | | | | | | | | |
| 30 | 3 | 7-1/2 | 10 | 10 | 20 | 30 | **DH361URKA1600** | **DH361URKA2600** |
| 60 | 10 | 20 | 25 | 20 | 50 | 60 | **DH362URKA1600** | **DH362URKA2600** |
| 100 | 20 | 40 | 50 | 40 | 75 | 100 | **DH363URKA1600** | **DH363URKA2600** |
| 200 | 15 | 50 | 50 | 60 | 125 | 150 | **DH364URKA1600** | **DH364URKA2600** |

***Note***
Contact the Safety Switch Flex Center at FlexSwitches@eaton.com for additional options, including 20 A GFI receptacles.

DH323FRKA1240

## Fusible 240 Vac—Three-Pole

| Ampere Rating | Fuse Type Provision | Maximum Horsepower Ratings (AC) Standard Fuse Single-Phase | Standard Fuse Three-Phase | Time Delay Single-Phase | Time Delay Three-Phase | 15 A GFI Receptacle Catalog Number | 20 A GFI Receptacle Catalog Number |
|---|---|---|---|---|---|---|---|
| **208 Vac Auxiliary Circuit Voltage** | | | | | | | |
| 30 | H | — | — | — | — | **DH321FRKA1208** | **DH321FRKA2208** |
| 60 | H | — | — | — | — | **DH322FRKA1208** | **DH322FRKA2208** |
| 100 | H | — | — | — | — | **DH323FRKA1208** | **DH323FRKA2208** |
| 200 | H | — | — | — | — | **DH324FRKA1208** | **DH324FRKA2208** |
| **240 Vac Auxiliary Circuit Voltage** | | | | | | | |
| 30 | H | 1-1/2 | 3 | — | 7-1/2 | **DH321FRKA1240** | **DH321FRKA2240** |
| 60 | H | 3 | 7-1/2 | — | 15 | **DH322FRKA1240** | **DH322FRKA2240** |
| 100 | H | 7-1/2 | 15 | — | 30 | **DH323FRKA1240** | **DH323FRKA2240** |
| 200 | H | 15 | 25 | — | 60 | **DH324FRKA1240** | **DH324FRKA2240** |

## Fusible 600 Vac—Three-Pole

| Ampere Rating | Fuse Type Provision | Maximum Horsepower Ratings with Time Delay Fuses Single-Phase AC 480 V | Single-Phase AC 600 V | Three-Phase AC 480 V | Three-Phase AC 600 V | 15 A GFI Receptacle Catalog Number | 20 A GFI Receptacle Catalog Number |
|---|---|---|---|---|---|---|---|
| **480 Vac Auxiliary Circuit Voltage** | | | | | | | |
| 30 | H | 7-1/2 | 10 | 15 | 20 | **DH361FRKA1480** | **DH361FRKA2480** |
| 60 | H | 20 | 25 | 30 | 50 | **DH362FRKA1480** | **DH362FRKA2480** |
| 100 | H | 30 | 40 | 60 | 75 | **DH363FRKA1480** | **DH363FRKA2480** |
| 200 | H | 50 | 50 | 125 | 150 | **DH364FRKA1480** | **DH364FRKA2480** |
| **600 Vac Auxiliary Circuit Voltage** | | | | | | | |
| 30 | H | 7-1/2 | 10 | 15 | 20 | **DH361FRKA1600** | **DH361FRKA2600** |
| 60 | H | 20 | 25 | 30 | 50 | **DH362FRKA1600** | **DH362FRKA2600** |
| 100 | H | 30 | 40 | 60 | 75 | **DH363FRKA1600** | **DH363FRKA2600** |
| 200 | H | 50 | 50 | 125 | 150 | **DH364FRKA1600** | **DH364FRKA2600** |

## Fusible 240 Vac—Three-Pole

| Ampere Rating | Fuse Type Provision | Maximum Horsepower Ratings AC Standard Fuse Single-Phase | Standard Fuse Three-Phase | Time Delay Single-Phase | Time Delay Three-Phase | 15 A GFI Receptacle Catalog Number | 20 A GFI Receptacle Catalog Number |
|---|---|---|---|---|---|---|---|
| **208 Vac Auxiliary Circuit Voltage** | | | | | | | |
| 30 | H | — | — | — | — | **DH321NRKA1208** | **DH321NRKA2208** |
| 60 | H | — | — | — | — | **DH322NRKA1208** | **DH322NRKA2208** |
| 100 | H | — | — | — | — | **DH323NRKA1208** | **DH323NRKA2208** |
| 200 | H | — | — | — | — | **DH324NRKA1208** | **DH324NRKA2208** |
| **240 Vac Auxiliary Circuit Voltage** | | | | | | | |
| 30 | H | 1-1/2 | 3 | — | 7-1/2 | **DH321NRKA1240** | **DH321NRKA2240** |
| 60 | H | 3 | 7-1/2 | — | 15 | **DH322NRKA1240** | **DH322NRKA2240** |
| 100 | H | 7-1/2 | 15 | — | 30 | **DH323NRKA1240** | **DH323NRKA2240** |
| 200 | H | 15 | 25 | — | 60 | **DH324NRKA1240** | **DH324NRKA2240** |

## Fusible 600 Vac—Three-Pole

| Ampere Rating | Fuse Type Provision | Maximum Horsepower Ratings with Time Delay Fuses Single-Phase AC 480 V | Single-Phase AC 600 V | Three-Phase AC 480 V | Three-Phase AC 600 V | 15 A GFI Receptacle Catalog Number | 20 A GFI Receptacle Catalog Number |
|---|---|---|---|---|---|---|---|
| **480 Vac Auxiliary Circuit Voltage** | | | | | | | |
| 30 | H | 7-1/2 | 10 | 15 | 20 | **DH361NRKA1480** | **DH361NRKA2480** |
| 60 | H | 20 | 25 | 30 | 50 | **DH362NRKA1480** | **DH362NRKA2480** |
| 100 | H | 30 | 40 | 60 | 75 | **DH363NRKA1480** | **DH363NRKA2480** |
| **600 Vac Auxiliary Circuit Voltage** | | | | | | | |
| 30 | H | 7-1/2 | 10 | 15 | 20 | **DH361NRKA1600** | **DH361NRKA2600** |
| 60 | H | 20 | 25 | 30 | 50 | **DH362NRKA1600** | **DH362NRKA2600** |
| 100 | H | 30 | 40 | 60 | 75 | **DH363NRKA1600** | **DH363NRKA2600** |

***Note***

Contact the Safety Switch Flex Center at FlexSwitches@eaton.com for additional options, including 20 A GFI receptacles.

## Dimensions

Approximate Dimensions in Inches (mm)

### Auxiliary Power Heavy-Duty Safety Switch

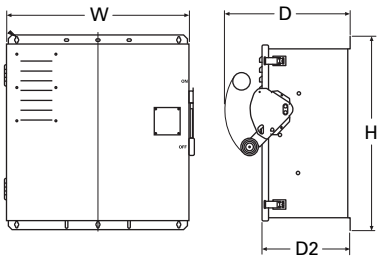


| Ampere Rating | NEMA 3R Width (W) | Height (H) | Depth (D1) | Depth (D2) | Weight Lb (kg) |
|---|---|---|---|---|---|
| 30 | 26.58 (675.1) | 24.93 (633.2) | 16.00 (406.4) | 11.29 (286.8) | ① |
| 60 | 26.58 (675.1) | 24.93 (633.2) | 16.00 (406.4) | 11.29 (286.8) | ① |
| 100 | 26.58 (675.1) | 24.93 (633.2) | 16.00 (406.4) | 11.29 (286.8) | ① |

***Note***

① 108 lb (49 kg) with a 15 A GFI receptacle; 130 lb (59 kg) with a 20 A GFI receptacle.

Left-Handed Safety Switch

## Contents


| *Description* | *Page* |
|---|---|
| Product Overview | **V2-T1-2** |
| General-Duty | **V2-T1-25** |
| Heavy-Duty | **V2-T1-30** |
| Heavy-Duty Double-Door Safety Switch | **V2-T1-41** |
| Six-Pole Switches | **V2-T1-45** |
| Double-Throw Switches | **V2-T1-48** |
| EnviroLine Stainless Steel Switch | **V2-T1-55** |
| Window Switches | **V2-T1-59** |
| Receptacle Switches | **V2-T1-62** |
| Non-Metallic KRYDON Switch | **V2-T1-64** |
| Shunt Trip Safety Switch | **V2-T1-67** |
| NEMA 7/9—Hazardous Location Disconnect Switch | **V2-T1-70** |
| Quick-Connect Switches | **V2-T1-72** |
| DC Disconnect Switches | **V2-T1-77** |
| Mill-Duty Rated, Heavy-Duty Safety Switch | **V2-T1-86** |
| Elevator Control Switch | **V2-T1-88** |
| Auxiliary Power Heavy-Duty Safety Switch | **V2-T1-91** |
| Left-Handed Safety Switch | |
| Heavy-Duty Surge Switch | **V2-T1-96** |
| EZ Isolator™ (OLI) Switch | **V2-T1-98** |
| Pringle Bolted Pressure Switch | **V2-T1-101** |
| Type DS, Fusible and Non-Fusible | **V2-T1-104** |
| Type Visi-Flex DE-ION | **V2-T1-107** |
| Flange Mounted—Variable Depth | **V2-T1-111** |
| Flange Mounted—Fixed Depth | **V2-T1-115** |


## Left-Handed Safety Switch

### Product Description

These safety switches are designed with the operating handle and mechanism on the left side of the switch. This option provides flexibility for installation and an added layer of safety to allow the switch to be operated without standing in front of the door.

### Features

- 30–200 A heavy-duty only
- Fusible and non-fusible
- NEMA 1, 3R, 12/3R and 4X
- Non-UL listed product
- Constructed with flange style handle (C361H1)
- No auxiliary contacts available

**Note:** Left-handed safety switches are supplied with a C361H1 handle.

### Product Selection

Select the standard safety switch from the catalog and **add Suffix -00LH** to the catalog number.

### Dimensions

Approximate Dimensions in Inches (mm)

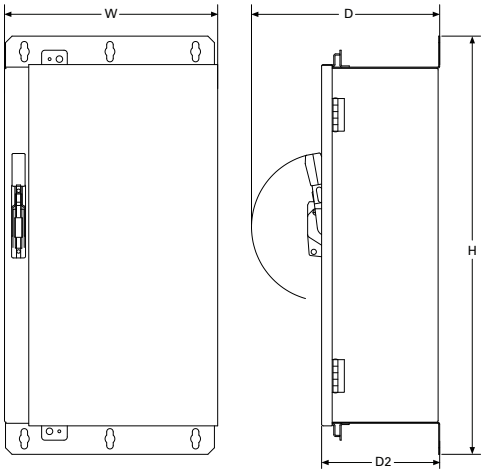


**Left-Handed Safety Switch**

| Amperage | W | D | D2 | H |
|---|---|---|---|---|
| 30–100 | 12.00 (304.8) | 9.05 (229.9) | 9.05 (229.9) | 22.30 (566.4) |
| | 16.00 (406.4) | 10.30 (261.6) | 9.05 (229.9) | 27.67 (702.8) |

Heavy-Duty Surge Switch

## Contents


| *Description* | *Page* |
|---|---|
| Product Overview | **V2-T1-2** |
| General-Duty | **V2-T1-25** |
| Heavy-Duty | **V2-T1-30** |
| Heavy-Duty Double-Door Safety Switch | **V2-T1-41** |
| Six-Pole Switches | **V2-T1-45** |
| Double-Throw Switches | **V2-T1-48** |
| EnviroLine Stainless Steel Switch | **V2-T1-55** |
| Window Switches | **V2-T1-59** |
| Receptacle Switches | **V2-T1-62** |
| Non-Metallic KRYDON Switch | **V2-T1-64** |
| Shunt Trip Safety Switch | **V2-T1-67** |
| NEMA 7/9—Hazardous Location Disconnect Switch | **V2-T1-70** |
| Quick-Connect Switches | **V2-T1-72** |
| DC Disconnect Switches | **V2-T1-77** |
| Mill-Duty Rated, Heavy-Duty Safety Switch | **V2-T1-86** |
| Elevator Control Switch | **V2-T1-88** |
| Auxiliary Power Heavy-Duty Safety Switch | **V2-T1-91** |
| Left-Handed Safety Switch | **V2-T1-95** |
| Heavy-Duty Surge Switch | |
| Catalog Number Selection | **V2-T1-97** |
| Dimensions | **V2-T1-97** |
| EZ Isolator™ (OLI) Switch | **V2-T1-98** |
| Pringle Bolted Pressure Switch | **V2-T1-101** |
| Type DS, Fusible and Non-Fusible | **V2-T1-104** |
| Type Visi-Flex DE-ION | **V2-T1-107** |
| Flange Mounted—Variable Depth | **V2-T1-111** |
| Flange Mounted—Fixed Depth | **V2-T1-115** |


## Heavy-Duty Surge Switch

### Product Description

Eaton's Switching Device product line combined heavy-duty safety switches and Eaton's SP1 and CVX series surge protective devices (SPDs) to provide reliable, cost-effective surge protection. Integral to the switch, an SPD provides significantly better performance compared to a device that is externally mounted, resulting in better protection for connected equipment. Eaton's new packaged solution provides contractors and end users a UL listed product by connecting the SPD to the safety switch at the factory.

### Features

- 30–1200 A
- NEMA 12/3R or 4X 304-Grade stainless steel enclosures
- External window over switching base standard
- Window to view LEDs of SPD for quick status view
- Enhanced visible blades included
- Eaton Type SP1 and CVX surge protective devices available

### Standards and Certifications

- UL 98, file no. E5239
- UL 1449 4th Edition, file no. E316410

Listed

#### *Seismic Qualifications*

- Heavy-duty switches exceed the requirements of Uniform Building Code (UBC) and California Code Title 24 OSP-0011-10, OSP-0012-10

For specific information on Eaton's SP1 and CVX surge protective devices, refer to product aids PA01005006E and PA01005002E.

## Catalog Number Selection

### Heavy-Duty Surge Switch

**DH 3 6 3 N D K __ W – CVXE**

**Switch Type**
**DH** = Heavy-duty

**Poles/Blades**
**2** = Two-pole
**3** = Three-pole

**Voltage**
**2** = 240 Vac
**6** = 600 Vac

**Amperes**
**1** = 30 A
**2** = 60 A
**3** = 100 A
**4** = 200 A
**5** = 400 A
**6** = 600 A
**7** = 800 A
**8** = 1200 A ①

**Fusible/Non-Fusible or Neutral**
**F** = Fusible without neutral
**N** = Fusible with neutral
**U** = Non-fusible without neutral

**NEMA Enclosure Ratings**
**D** = NEMA 12/3R
**W** = NEMA 4X 304 stainless

**Series**
**K** = K switch

**Non-Fusible Neutral**
**Blank** = Fusible, or non-fusible without neutral
**N** = Non-fusible with neutral

**Window**
**W** = Viewing windows

| SP1 Type Surge Device | CVX Type Surge Device |
|---|---|
| **SP1A** = SP1–240S (120/240 V single- or split-phase) | **CVXA** = CVX050–240S (120/240 V single- or split-phase) |
| **SP1B** = SP1–208Y (208/120 V, 3 PH, 4 W) | **CVXB** = CVX100–240S (120/240 V single- or split-phase) |
| **SP1C** = SP1–480Y (480/277 V, 3 PH, 4 W) | **CVXC** = CVX050–208Y (208/120 V, 3 PH, 4 W) |
| **SP1D** = SP1–600Y (600/347 V, 3 PH, 4 W) | **CVXD** = CVX100–208Y (208/120 V, 3 PH, 4 W) |
| **SP1E** = SP1–240D (240 V, 3 PH, 3 W Delta) | **CVXE** = CVX050–480Y (480/277 V, 3 PH, 4 W) |
| **SP1F** = SP1–480D (480 V, 3 PH, 3 W Delta) | **CVXF** = CVX100–480Y (480/277 V, 3 PH, 4 W) |
| **SP1G** = SP1–600D (600 V, 3 PH, 3 W Delta) | **CVXG** = CVX050–600Y (600/347 V, 3 PH, 4 W) |
| | **CVXH** = CVX100–600Y (600/347 V, 3 PH, 4 W) |
| | **CVXI** = CVX050–240D (240 V, 3 PH, 3 W) |
| | **CVXJ** = CVX100–240D (240 V, 3 PH, 3 W) |
| | **CVXK** = CVX050–480D (480 V, 3 PH, 3 W) |
| | **CVXL** = CVX100–480D (480 V, 3 PH, 3 W) |
| | **CVXM** = CVX050–600D (600 V, 3 PH, 3 W) |
| | **CVXN** = CVX100–600D (600 V, 3 PH, 3 W) |
| | **CVXO** = CVX050–240H (120/240 V, 3 PH high leg delta) |
| | **CVXP** = CVX100–240H (120/240 V, 3 PH high leg delta) |

**This table is intended for use in breaking down existing catalog numbers. It is not intended for building new catalog numbers.**

## Dimensions

Approximate Dimensions in Inches (mm)

### Heavy-Duty Surge Switch

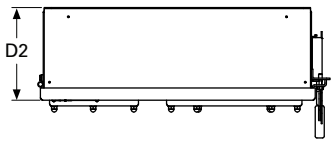


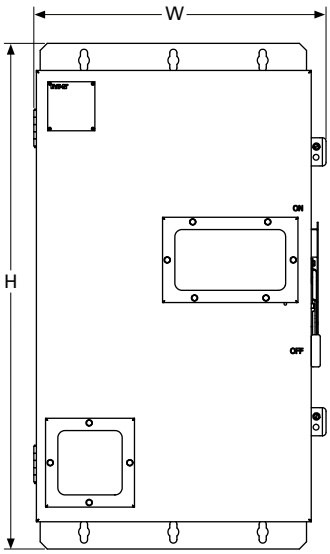


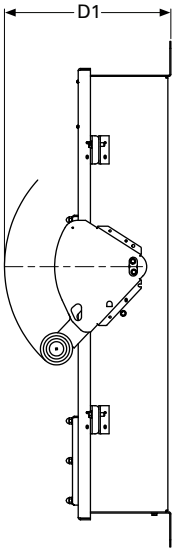


### Heavy-Duty Surge Switch

| Ampere Rating | Height (H) | Width (W) | Depth (D1) | Depth (D2) |
|---|---|---|---|---|
| 30 | 25.02 (635.5) | 15.00 (381.0) | 10.31 (261.9) | 5.62 (142.7) |
| 60 | 25.02 (635.5) | 15.00 (381.0) | 10.31 (261.9) | 5.62 (142.7) |
| 100 | 25.02 (635.5) | 15.00 (381.0) | 10.31 (261.9) | 5.62 (142.7) |
| 200 | 35.37 (898.4) | 20.44 (519.2) | 11.66 (296.2) | 6.48 (164.6) |
| 400 | 57.47 (1459.7) | 23.30 (591.8) | 12.45 (316.2) | 7.36 (186.9) |
| 600 | 62.97 (1599.4) | 24.30 (617.2) | 14.08 (357.6) | 8.98 (228.1) |
| 800 | 71.72 (1821.7) | 25.55 (649.0) | 14.08 (357.6) | 8.98 (228.1) |
| 1200 | 73.77 (1873.8) | 43.12 (1095.0) | 19.20 (487.7) | 12.46 (316.5) |

### Standard Lug Capacities

| Ampere Rating | Minimum Wire Size | Maximum Wire Size | Wire Type |
|---|---|---|---|
| 30 | #14 | #2 | Cu/Al |
| 60 | #14 | #2 | Cu/Al |
| 100 | #14 | #1/0 | Cu/Al |
| 200 | #6 | #300 kcmil | Cu/Al |
| 400 | (2) #1/0<br>(1) #1/0 | (2) 300 kcmil<br>(1) 750 kcmil | Cu/Al or<br>Cu/Al |
| 600 | (1) #2<br>(1) #1/0 | (1) 600 kcmil<br>(1) 750 kcmil | Cu/Al and<br>Cu/Al |
| 800 | (4) #1/0 | (4) 750 kcmil | Cu/Al |
| 1200 | (4) #1/0 | (4) 750 kcmil | Cu/Al |

***Note***

① Available with SP1 type surge device only.

**EZ Isolator™ (OLI) Switch**

ChekVolt

Voltage Indicator and Voltage Portal

Voltage Indicator

EZ Isolaor™ integrated onto control panel enclosure

## Contents


| *Description* | *Page* |
|---|---|
| Product Overview | **V2-T1-2** |
| General-Duty | **V2-T1-25** |
| Heavy-Duty | **V2-T1-30** |
| Heavy-Duty Double-Door Safety Switch | **V2-T1-41** |
| Six-Pole Switches | **V2-T1-45** |
| Double-Throw Switches | **V2-T1-48** |
| EnviroLine Stainless Steel Switch | **V2-T1-55** |
| Window Switches | **V2-T1-59** |
| Receptacle Switches | **V2-T1-62** |
| Non-Metallic KRYDON Switch | **V2-T1-64** |
| Shunt Trip Safety Switch | **V2-T1-67** |
| NEMA 7/9—Hazardous Location Disconnect Switch | **V2-T1-70** |
| Quick-Connect Switches | **V2-T1-72** |
| DC Disconnect Switches | **V2-T1-77** |
| Mill-Duty Rated, Heavy-Duty Safety Switch | **V2-T1-86** |
| Elevator Control Switch | **V2-T1-88** |
| Auxiliary Power Heavy-Duty Safety Switch | **V2-T1-91** |
| Left-Handed Safety Switch | **V2-T1-95** |
| Heavy-Duty Surge Switch | **V2-T1-96** |
| OEM Line Isolation (OLI) Switch | |
| Additional Features and Benefits | **V2-T1-99** |
| Catalog Number Selection | **V2-T1-99** |
| Modifications | **V2-T1-99** |
| Technical Data and Specifications | **V2-T1-99** |
| Pringle Bolted Pressure Switch | **V2-T1-101** |
| Type DS, Fusible and Non-Fusible | **V2-T1-104** |
| Type Visi-Flex DE-ION | **V2-T1-107** |
| Flange Mounted—Variable Depth | **V2-T1-111** |
| Flange Mounted—Fixed Depth | **V2-T1-115** |


## EZ Isolator™ (OLI) Switch

### Product Description

Traditional control panels may expose operators to line side system voltage (i.e., 480 Vac) even when the internal main disconnect is in the OFF position. Many panel-building OEMs and OEM customers are concerned with arc flash hazards and arc flash categories and may be looking for ways to reduce them.

The solution is the EZ Isolator™ (OLI) —another product in Eaton's expanding offering of safer switching devices. The EZ Isolator™ switch provides an external disconnecting means for industrial control panels. It allows an operator to access the control panel without exposure to the line side voltage, thus enhancing safety and allowing for reduced PPE, which improves worker dexterity and mobility.

The EZ Isolator™ is designed to universally integrate to major manufacturers' "disconnect enclosures" that will work with the Eaton C371-style handle and operating mechanism. The Eaton solution is a complete package, including enclosure, disconnect, handle, flex-cable operator and all other necessary components.

### Features

- 30–600 A
- NEMA 12/3R and 4/4X enclosures
- Oversized line shield (internal to switch)
- Gasketed side wall mounts to OEM cabinet
- Permanent Electrical Safety Device (PESD): Optional
  - ChekVolt
  - Voltage Indicator and Voltage Portal
  - Voltage Indicator
- Mechanical interlock—cannot open switch or OEM cabinet when handle is in the ON position
- Flange handle (for mounting on OEM cabinet)
- Custom Flex Shaft™ operator modified to work with safety switch

### Standards and Certifications

- UL/cUL
- UL 98 standard, file no. E222859
- UL 50 standard, file no. E478865

Listed

## Additional Features and Benefits

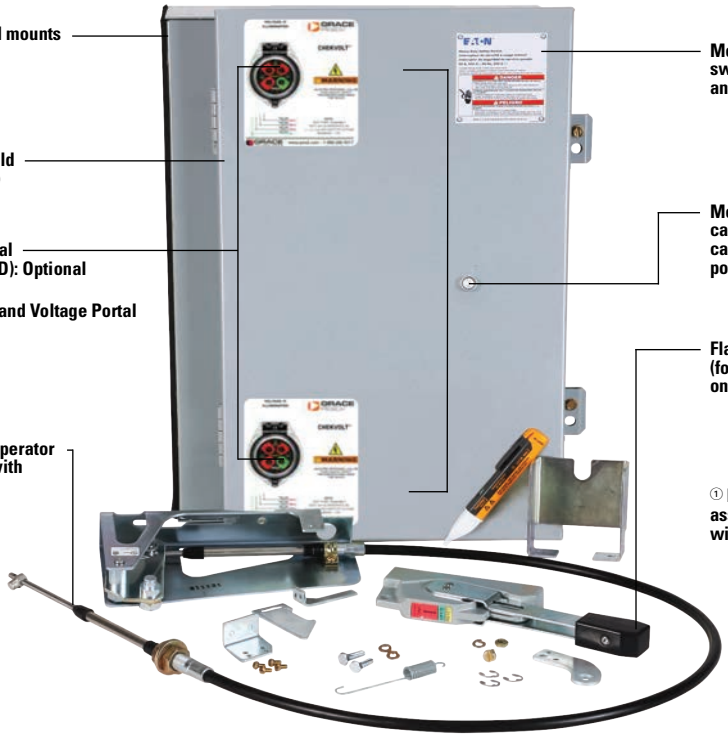


## Catalog Number Selection

### EZ Isolator™ (OLI) Switch

**OLI 3 6 3 F D J D - 00VP**

**Switch type**
OEM Line Isolation

**Poles/Blades**
**2** = Two-pole
**3** = Three-pole

**Voltage**
**6** = 600 Vac max.

**Ampere rating**
**1** = 30 A
**2** = 60 A
**3** = 100 A
**4** = 200 A
**5** = 400 A
**6** = 600 A

**Fusible/Non-fusible**
**F** = Fusible without neutral
**U** = Non-fusible without neutral

**NEMA enclosure**
**D** = NEMA 12/3R
**W** = NEMA 4X stainless

**Fuse Class Provisions**
**J** = Class J
**X** = Non (non-fused)

**PESD location ②**
**X** = None
**D** = Load side
**E** = Line and load side
**F** = Line side

**Options/Modifications ①**
**0000** = None
**0002** = 1NO/1NC aux
**0003** = 2NO/2NC aux
**BLAK** = Painted black
**ORNG** = Painted orange
**0RED** = Painted red
**0316** = 316 stainless steel
**00NP** = Custom nameplate
**000G** = Additional grounding
**00VP** = Voltage portal
**00VI** = Voltage Indicator
**VIVP** = Voltage Indicator and Voltage Portal
**00CV** = ChekVolt ③

***Notes***

① More combinations and options are available.
② Permanent Electrical Safety Device (PESD): Voltage Indicator, Portal or ChekVolt
③ ChekVolt: Verify voltage presence and test for absence of voltage in one device

1

## Technical Data and Specifications

### Ratings and Capacities

| Ampere Rating | Short-Circuit Ratings (Amperes) Fusible (Class J) | Non-Fusible | Standard Lug Capacities Per Phase Min. Wire Size | Max. Wire Size | Wire Type | Ground Min. Wire Size | Max. Wire Size | Wire Type |
|---|---|---|---|---|---|---|---|---|
| 30 | 200 k at 600 V | 10 k at 600 V | #14 | #2 | Cu/Al | (2) #14 | (2) 1/0 | Cu/Al |
| 60 | 200 k at 600 V | 10 k at 600 V | #14 | #2 | Cu/Al | (2) #14 | (2) 1/0 | Cu/Al |
| 100 | 200 k at 600 V | 10 k at 600 V | #14 | 1/0 | Cu/Al | (2) #14 | (2) 1/0 | Cu/Al |
| 200 | 200 k at 600 V | 10 k at 600 V | #6 | 300 kcmil | Cu/Al | (2) #14 | (2) 1/0 | Cu/Al |
| 400 | 100 k at 600 V<br>200 k at 480 V | 10 k at 600 V | (2) 1/0<br>(1) 1/0 | (2) 300 kcmil or<br>(1) 750 kcmil | Cu/Al | (2) #6 | (2) 250 kcmil | Cu/Al |
| 600 | 100 k at 600 V<br>200 k at 480 V | 10 k at 600 V | (1) #2<br>(1) #1/0 | (1) 300 kcmil and<br>(1) 750 kcmil | Cu/Al | (2) #6 | (2) 250 kcmil | Cu/Al |

## Dimensions

Approximate Dimensions in Inches (mm)

### EZ Isolator™ (OLI) Switch

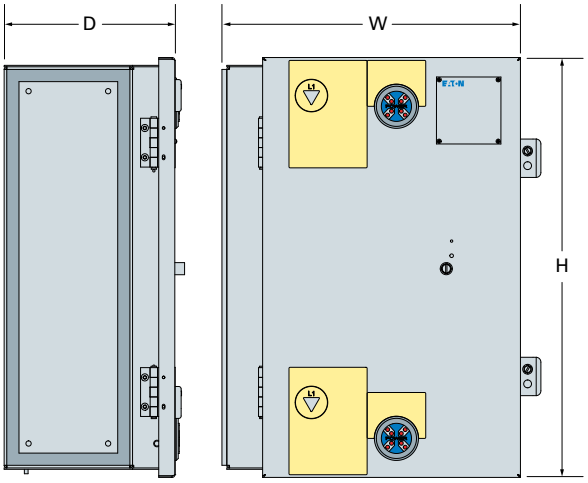


| Switch Amperage | Height (H) | Width (W) | Depth (D) |
|---|---|---|---|
| 30 | 21.49 (545.8) | 16.08 (408.4) | 9.24 (234.7) |
| 60 | 21.49 (545.8) | 16.08 (408.4) | 9.24 (234.7) |
| 100 | 28.21 (716.5) | 18.30 (464.8) | 9.24 (234.7) |
| 200 | 28.21 (716.5) | 18.30 (464.8) | 9.24 (234.7) |
| 400 | 50.15 (1273.8) | 21.30 (541.0) | 9.24 (234.7) |
| 600 | 54.49 (1384.0) | 21.30 (541.0) | 12.14 (308.3) |

**Pringle Bolted Pressure Switches**

*CBC Type Switch*

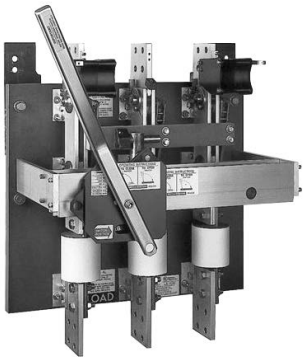

*QA Type Switch*

## Contents


| *Description* | *Page* |
|---|---|
| Product Overview | **V2-T1-2** |
| General-Duty | **V2-T1-25** |
| Heavy-Duty | **V2-T1-30** |
| Heavy-Duty Double-Door Safety Switch | **V2-T1-41** |
| Six-Pole Switches | **V2-T1-45** |
| Double-Throw Switches | **V2-T1-48** |
| EnviroLine Stainless Steel Switch | **V2-T1-55** |
| Window Switches | **V2-T1-59** |
| Receptacle Switches | **V2-T1-62** |
| Non-Metallic KRYDON Switch | **V2-T1-64** |
| Shunt Trip Safety Switch | **V2-T1-67** |
| NEMA 7/9—Hazardous Location Disconnect Switch | **V2-T1-70** |
| Quick-Connect Switches | **V2-T1-72** |
| DC Disconnect Switches | **V2-T1-77** |
| Mill-Duty Rated, Heavy-Duty Safety Switch | **V2-T1-86** |
| Elevator Control Switch | **V2-T1-88** |
| Auxiliary Power Heavy-Duty Safety Switch | **V2-T1-91** |
| Left-Handed Safety Switch | **V2-T1-95** |
| Heavy-Duty Surge Switch | **V2-T1-96** |
| EZ Isolator™ (OLI) Switch | **V2-T1-98** |
| Pringle Bolted Pressure Switch | |
| Catalog Number Selection | **V2-T1-102** |
| Product Selection | **V2-T1-103** |
| Type DS, Fusible and Non-Fusible | **V2-T1-104** |
| Type Visi-Flex DE-ION | **V2-T1-107** |
| Flange Mounted—Variable Depth | **V2-T1-111** |
| Flange Mounted—Fixed Depth | **V2-T1-115** |


## Pringle Bolted Pressure Switch

### Product Description

Eaton Pringle™ switches have helped pioneer development of high-quality electrical products for commercial and industrial applications since 1891. Eaton's commitment to engineering excellence and reputation for quality have made us a recognized leader in the electrical industry, and today you'll find our electrical products in use throughout the U.S., Canada and most of the world's major markets. Eaton Pringle bolted contact switches are a worldwide standard in high-current switching applications. They are custom-built and used in many heavy-duty applications, and are suitable for use in UL 891 switchboards.

***Bolted Pressure Contacts***

All Pringle switches feature bolted pressure contacts. The result: blade contact surfaces are bolted closed at a pressure of 600 PSI—at both the hinge and jaw ends. The benefit: current conducting efficiency is the equivalent of a bolted bus bar connection.

### Features

- 480 V UL
- 600 V CSA
- 800–4000 A
- 5000–6000 A (not UL listed)
- 200 kAIC and 100% rated with Class "L" fuses
- Top or bottom feed
- Two, three- or four-pole
- Optional blown fuse detection and protection
- Quick-positive switching action
- Manual or electrically operated mechanism
- 6X Make/12X Break contact rating
- Many options available, see following page

***Spring Mechanism***

All quick action switches use a unique spring mechanism for improved reliability over traditional coil springs. The unique spring design is created by a series of concave-convex washers. The paired-washer spring design provides a higher force/distance ratio, making it easier to operate the mechanism.

Should any pair of washers become inoperable for any reason, the entire spring assembly will still be operable by means of the remaining pairs. This is unlike the situation if a coil spring were to fracture or fatigue.

*Sample Spring Configuration*

### Standards and Certifications

- 480 V UL
- 600 V CSA

1

## Catalog Number Selection

### Pringle Bolted Pressure Switch

**CB 08 3 3 B 120 480 K G R AO CT 5 6**

**Switch**
- **CB** = CBC
- **QA** = QA
- **FP** = FP

**Amperes**
- **08** = 800 A
- **12** = 1200 A
- **16** = 1600 A
- **20** = 2000 A
- **25** = 2500 A
- **30** = 3000 A
- **40** = 4000 A
- **50** = 5000 A ①
- **60** = 6000 A ①

**Poles**
- **2** = Two-pole
- **3** = Three-pole
- **4** = Four-pole

**Wire**
- **2** = Two-wire
- **3** = Three-wire
- **4** = Four-wire ②

**Feed**
- **B** = Bottom
- **T** = Top

**Voltage Control** ③
- **120** = 120 V ④

**System Voltage**
- **208** = 208 V ⑤
- **480** = 480 V
- **600** = 600 V

**Interlock**
- **D** = Door interlock ⑥
- **K** = Key interlock provisions
- **L** = Both D and K above ⑥

**Arc Energy Reduction / Ground Fault** ③⑨
- **C** = Arc energy reduction relay / ground fault combination relay
- **E** = Arc energy reduction relay
- **G** = Ground fault with control power transformer
- **GNX** = Ground fault without control power transformer

**Phase Failure Relay** ③
- **R** = Single-phase voltage relay with capacitor trip device (SPVR) ⑧

**Blown Fuse Detector (BFD)**
- **A** = BFD with three normally ON lights (does NOT trip)
- **AO** = BFD with three normally OFF lights (does NOT trip)
- **AX** = BFD with NO lights (trips switch)
- **A9** = BFD with three normally ON lights (trips switch)
- **AR** = BFD with three normally OFF lights (trips switch)

**Control Power Transformer** ③
- **CT** = With control power transformer ⑦

**Auxiliary Contact**
- **5** = 1NO/1NC
- **7** = 2NO/2NC

**Options**
- **6** = With handle suitable to meet 6'6" requirements

***Notes***

① Not UL listed.
② For CB switch type. Four-wire is extra neutral sensor only; for when AF/GF combo relay is selected. Neutral bar/bus provided by others.
③ Not an option with QA type switches.
④ 110 Vdc also available. Please contact the plant.
⑤ For QA switches, please use a 480 V system catalog number when referencing a 208 V system.
⑥ Only available for residential metering enclosures.
⑦ Only applicable if ordering a CPT only, without ground fault.
⑧ Includes control power transformer.
⑨ Switch with relay protection must use 120 V control voltage.

## Product Selection

***Manually Operated (QA)—UL Listed***

Manually operated contact switch with quick positive switching action. Can be top or bottom fed.

***Electrical Trip (CBC)—UL Listed***

Contact switch with charge-before-close mechanism. Can be manually or electrically tripped. Optional blown fuse detector and phase failure relay with capacitor trip available.

***Service***

Eaton's Pringle switches are manufactured with precision-made parts and, like any mechanical device, they do require routine maintenance to operate at the optimal level. Over time, contact surfaces may be exposed to dirt and other contaminants, which could result in improper mechanical and/or electrical operation of the switch.

Eaton's Electrical Engineering Services & Systems team can perform planned maintenance and diagnose problems as well as respond to emergencies. Locate your local office by calling 1-800-498-2678 or visiting www.eaton.com/service and selecting the "Locate an Eaton Engineering office" link.

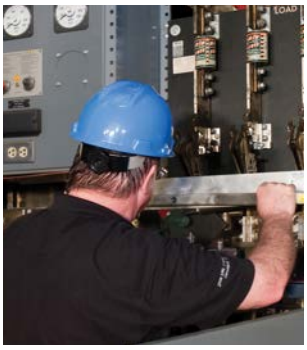

***Aftermarket Parts***

Eaton offers replacement components, as well as replacement switches. Aftermarket part information can be found in publication TD00808001E or by calling 1-877-ETN-CARE (1-877-386-2273).

Type DS, Fusible and Non-Fusible

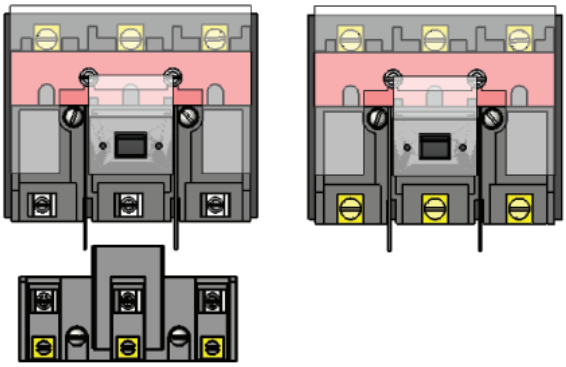

## Contents


| *Description* | *Page* |
|---|---|
| Product Overview | **V2-T1-2** |
| General-Duty | **V2-T1-25** |
| Heavy-Duty | **V2-T1-30** |
| Heavy-Duty Double-Door Safety Switch | **V2-T1-41** |
| Six-Pole Switches | **V2-T1-45** |
| Double-Throw Switches | **V2-T1-48** |
| EnviroLine Stainless Steel Switch | **V2-T1-55** |
| Window Switches | **V2-T1-59** |
| Receptacle Switches | **V2-T1-62** |
| Non-Metallic KRYDON Switch | **V2-T1-64** |
| Shunt Trip Safety Switch | **V2-T1-67** |
| NEMA 7/9—Hazardous Location Disconnect Switch | **V2-T1-70** |
| Quick-Connect Switches | **V2-T1-72** |
| DC Disconnect Switches | **V2-T1-77** |
| Mill-Duty Rated, Heavy-Duty Safety Switch | **V2-T1-86** |
| Elevator Control Switch | **V2-T1-88** |
| Auxiliary Power Heavy-Duty Safety Switch | **V2-T1-91** |
| Left-Handed Safety Switch | **V2-T1-95** |
| Heavy-Duty Surge Switch | **V2-T1-96** |
| EZ Isolator™ (OLI) Switch | **V2-T1-98** |
| Pringle Bolted Pressure Switch | **V2-T1-101** |
| Type DS, Fusible and Non-Fusible | |
| Product Selection | **V2-T1-105** |
| Options and Accessories | **V2-T1-105** |
| Technical Data and Specifications | **V2-T1-106** |
| Type Visi-Flex DE-ION | **V2-T1-107** |
| Flange Mounted—Variable Depth | **V2-T1-111** |
| Flange Mounted—Fixed Depth | **V2-T1-115** |


## Type DS, Fusible and Non-Fusible

### Product Description

Type DS disconnect is a compact load break switch using the DE-ION arc-quenching principle and quick make/quick break over center toggle mechanism. It has visible contacts, is UL listed and is available either as a fusible or non-fusible switch.

**Note:** Switches through 200 A are UL listed as miscellaneous switches; 400 and 600 A switches are recognized under the component program of Underwriters Laboratories.

### Application Description

Maximum switch-fuse application based on short-circuit current withstand (symmetrical amperes).

### Short-Circuit Ratings

| Switch Rating Amperes | Maximum Application at 240, 480 or 600 Vac | |
|---|---|---|
| | Class R Fuses | Current Limiting Fuse Class J |
| 30 | 200,000 | 200,000 |
| 60 | 200,000 | 200,000 |
| 100 | 200,000 | 200,000 |
| 400 | 100,000 ① | 200,000 |
| 600 | 100,000 ① | 200,000 |

***Note***

① 480 V maximum.

### Standards and Certifications

- UL 98
- CSA (see table on **Page V2-T1-105**)

## Product Selection

### *DS Type Switch*

### Switch Ordering Information

| Switch Rating | Fuse Clip Rating Ampere | Type Volts ① | Catalog Number ②③ |
|---|---|---|---|
| 30 | No fuse ④ | — | **DS16U** |
| 30 | 30 | NEC 250 | **DS121R** |
| 30 | 30 | NEC 600 | **DS161R** |
| 30 | 60 | NEC 250 | **DS122** |
| 30 | 60 | NEC 600 | **DS162** |
| 60 | No fuse ④ | — | **DS26U** |
| 60 | 60 | NEC 250 | **DS222R** |
| 60 | 60 | NEC 600 | **DS262R** |
| 60 | 100 | NEC 250/600 | **DS263** |
| 100 | No fuse ④ | — | **DS36U** |
| 100 | 100 | NEC 250/600 | **DS363R** |
| 100 ⑤ | 200 | NEC 250/600 | **DS364** |
| 400 | No fuse ④ | — | **DS56U** |
| 400 | 400 | NEC 250/600 | **DS565R** |
| 600 | No fuse ④ | — | **DS66U** |
| 600 | 600 | NEC 250/600 | **DS666R** |

## Options and Accessories

### *Base Mounting Hardware*

**Note:** Order separately when required. No charge when ordered with switch.

### Base Mounting Hardware

| Description | Catalog Number |
|---|---|
| 30, 60, 100 A non-fusible | **624B375G17** |
| 30, 60, 100 A fusible | **624B375G17** |
| 400 or 600 A non-fusible | **673B125G04** |
| 400 or 600 A Fusible | **673B125G05** |

### *Auxiliary Switch Kits*

**Note:** Permits field mounting of an auxiliary switch for separate control circuit applications. Each switch includes three soldered, identified leads. Rated 250 V maximum.

### Auxiliary Switch Kits

| Switch Used With | Contact Arrangement | Kit Catalog Number |
|---|---|---|
| 30, 60, 100 A | 1A-1B | **178C265G05** |
| 30, 60, 100 A | 2As-2Bs | **178C265G06** |

### Class R Fuse Clip Conversion Kits for Type DS Switches

| Switch Rating Amperes | Volts | Kit Catalog Number |
|---|---|---|
| 30 | 250 | **RFK121** |
| 30 | 600 | **RFK161** |
| 60 | 250 | **RFK222** |
| 60 | 600 | **RFK262** |
| 100 | 250/600 | **RFK464** |
| 400 | 250/600 | **RFK666** |
| 600 | 250/600 | **RFK666** |

***Notes***

① 600 V ratings are suitable for Class J fuses.
② Switches with Catalog Number Suffix **R** are UL listed for use with Class R fuses when fuse clip conversion kits shown on this page are used.
③ Switches with Catalog Number Suffix **R** or **U** are CSA listed.
④ Rated 600 V.
⑤ Supplied as unfused switch with separate fuse blocks.

1

## Technical Data and Specifications

### Maximum Horsepower

| Type Switch | Maximum Horsepower Ratings 120 Vac Standard | Time Delay | 240 Vac Standard | Time Delay | 480 Vac Standard | Time Delay | 600 Vac Standard | Time Delay | 250 Vdc |
|---|---|---|---|---|---|---|---|---|---|
| DS16U | 5 | — | 10 | — | 20 | — | 25 | — | 7-1/2 |
| DS121R | 1-1/2 | 3 | 3 | 7-1/2 | — | — | — | — | 5 |
| DS122 | 3 | — | 7-1/2 | — | — | — | — | — | 5 |
| DS161R | — | — | — | — | 5 | 15 | 7-1/2 | 20 | 5 |
| DS162 | — | — | — | — | 15 | — | 15 | — | 5 |
| DS26U | 10 | — | 20 | — | 40 | — | 60 | — | 15 |
| DS222R | 3 | 7-1/2 | 7-1/2 | 15 | — | — | — | — | 10 |
| DS262R | — | — | — | — | 15 | 30 | 15 | 50 | 10 |
| DS263 | — | — | 15 | — | 25 | — | 30 | — | 10 |
| DS36U | 15 | — | 30 | — | 75 | — | 75 | — | 25 |
| DS363R | — | — | 15 | 30 | 25 | 60 | 30 | 75 | 20 |
| DS364 | — | — | 25 | — | 50 | — | 60 | — | 20 |
| DS56U | — | — | 100 | — | 250 | — | 350 | — | — |
| DS565R | — | — | 50 | 100 | 100 | 250 | 125 | 350 | — |
| DS66U | — | — | 100 | — | 400 | — | 500 | — | — |
| DS666R | — | — | 75 | 100 | 150 | 400 | 200 | 500 | — |

### Terminal Data

| Switch Rating | Wire Range Copper | Aluminum |
|---|---|---|
| 30 | #14–#2 | #12–#2 |
| 60 | #14–#2 | #12–#2 |
| 100 | #14–1/0 | #12–1/0 |
| 400 | (1) #4–600 kcmil or (2) 1/0–3/0 | (1) #4–600 kcmil or (2) 1/0–250 kcmil |
| 600 | Same as 400 A except two terminals per pole | — |

***Note***
Terminals are suitable for either copper or aluminum cable.

Type Visi-Flex DE-ION

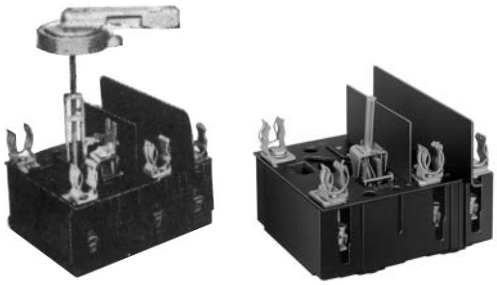

## Contents


| *Description* | *Page* |
|---|---|
| Product Overview | **V2-T1-2** |
| General-Duty | **V2-T1-25** |
| Heavy-Duty | **V2-T1-30** |
| Heavy-Duty Double-Door Safety Switch | **V2-T1-41** |
| Six-Pole Switches | **V2-T1-45** |
| Double-Throw Switches | **V2-T1-48** |
| EnviroLine Stainless Steel Switch | **V2-T1-55** |
| Window Switches | **V2-T1-59** |
| Receptacle Switches | **V2-T1-62** |
| Non-Metallic KRYDON Switch | **V2-T1-64** |
| Shunt Trip Safety Switch | **V2-T1-67** |
| NEMA 7/9—Hazardous Location Disconnect Switch | **V2-T1-70** |
| Quick-Connect Switches | **V2-T1-72** |
| DC Disconnect Switches | **V2-T1-77** |
| Mill-Duty Rated, Heavy-Duty Safety Switch | **V2-T1-86** |
| Elevator Control Switch | **V2-T1-88** |
| Auxiliary Power Heavy-Duty Safety Switch | **V2-T1-91** |
| Left-Handed Safety Switch | **V2-T1-95** |
| Heavy-Duty Surge Switch | **V2-T1-96** |
| EZ Isolator™ (OLI) Switch | **V2-T1-98** |
| Pringle Bolted Pressure Switch | **V2-T1-101** |
| Type DS, Fusible and Non-Fusible | **V2-T1-104** |
| Type Visi-Flex DE-ION | |
| Product Selection | **V2-T1-108** |
| Options and Accessories | **V2-T1-109** |
| Technical Data and Specifications | **V2-T1-110** |
| Flange Mounted—Variable Depth | **V2-T1-111** |
| Flange Mounted—Fixed Depth | **V2-T1-115** |


## Type Visi-Flex DE-ION

### Product Description

Complete Model A switch styles with fuse or non-fuse kits mounted are UL listed. Refer to "Electrical Construction Materials List," miscellaneous switches. Switches only, no fuse, fuse clip kit and all Model T switches are recognized under the component program of Underwriters Laboratories. The external operating handle of Model A can be padlocked in the OFF position with up to three padlocks.

#### *Terminal Data*

- 30, Spec. 60 A switches: #14–#4 Cu cable only
- 60, 100 A switches #14–1/0 Cu cable only

### Standards and Certifications

- UL 98

1

## Product Selection

**Model A**

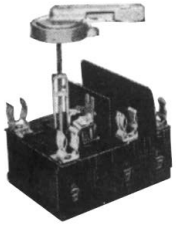

**Model T**

### Switch Ordering Information

| Continuous Ampere Rating | Fuse or No-Fuse Kit (see photos on Page V2-T1-109) | Model A, Adjustable Depth: Complete Unit Catalog Number ① | Model A, Adjustable Depth: Switch Only ② Catalog Number (see handle and shaft below, fuse kit at right) | Model T, Toggle Operated Switch Only ③ Catalog Number (see fuse kit at right) | Fuse Clip Kits for Model A or T NEC and Standard Time Delay ④⑤ (No-Fuse Kit—See Below): Clips for Class K or H Fuses Catalog Number | Fuse Clip Kits for Model A or T NEC and Standard Time Delay ④⑤ (No-Fuse Kit—See Below): Clips for Class R Fuses Only Catalog Number |
|---|---|---|---|---|---|---|
| 30 | No fuse ⑦ | **2607D89G01** | **2607D63G02** | **371D392G02** | — | — |
| | 30 A/250 V | **2607D89G02** | **2607D63G01** | **371D392G01** | **313C590G08** | **1226C94G01** |
| | 60 A/250 V | **2607D89G03** | **2607D63G01** | **371D392G01** | **313C590G09** | **1226C94G03** |
| | 100 A/250 V | **2607D89G04** | **2607D63G01** | **371D392G01** | **313C590G13** | **1226C94G05** |
| | 30 A/600 V | **2607D89G05** | **2607D63G01** | **371D392G01** | **313C590G10** | **1226C94G02** |
| | 60 A/600 V | **2607D89G06** | **2607D63G01** | **371D392G01** | **313C590G11** | **1226C94G04** |
| Special 60 ⑥ | No fuse ⑦ | **2607D89G07** | **2607D63G06** | **371D392G06** | — | — |
| | 30 A/250 V | **2607D89G08** | **2607D63G05** | **371D392G05** | **313C590G08** | **1226C94G01** |
| | 60 A/250 V | **2607D89G09** | **2607D63G05** | **371D392G05** | **313C590G09** | **1226C94G03** |
| | 100 A/250 V | **2607D89G10** | **2607D63G05** | **371D392G05** | **313C590G13** | **1226C94G05** |
| | 30 A/600 V | **2607D89G11** | **2607D63G05** | **371D392G05** | **313C590G10** | **1226C94G02** |
| | 60 A/600 V | **2607D89G12** | **2607D63G05** | **371D392G05** | **313C590G11** | **1226C94G04** |
| 60 ⑥ | No fuse ⑦ | **2607D90G01** | **2607D66G14** | **657D780G12** | — | — |
| | 30 A/250 V | **2607D90G02** | **2607D66G13** | **657D780G11** | **177C880G23** | **1226C94G06** |
| | 60 A/250 V | **2607D90G03** | **2607D66G13** | **657D780G11** | **177C880G12** | **1226C94G08** |
| | 100 A/250 V | **2607D90G04** | **2607D66G13** | **657D780G11** | **177C880G13** | **1226C94G10** |
| | 200 A/250 V | **2607D90G05** | **2607D66G13** | **657D780G11** | **177C880G14** | — |
| | 30 A/600 V | **2607D90G06** | **2607D66G13** | **657D780G11** | **177C880G24** | **1226C94G07** |
| | 60 A/600 V | **2607D90G07** | **2607D66G13** | **657D780G11** | **177C880G15** | **1226C94G09** |
| | 100 A/600 V | **2607D90G08** | **2607D66G13** | **657D780G11** | **177C880G16** | **1226C94G11** |
| 100 | No fuse ⑦ | **2607D91G07** | **2607D66G18** | **657D780G16** | — | — |
| | 60 A/250 V | **2607D91G08** | **2607D66G17** | — | **177C880G12** | **1226C94G08** |
| | 100 A/250 V | **2607D91G09** | **2607D66G17** | **657D780G15** | **177C880G13** | **1226C94G10** |
| | 20 A/250 V | **2607D91G10** | **2607D66G17** | **657D780G15** | **177C880G14** | — |
| | 60 A/600 V | **2607D91G11** | **2607D66G17** | — | **177C880G15** | **1226C94G09** |
| | 100 A/600 V | **2607D91G12** | **2607D66G17** | **657D780G15** | **177C880G16** | **1226C94G11** |
| | 200 A/600 V | **2607D91G13** | **2607D66G17** | **657D780G15** | **177C880G18** | — |

***Notes***

① Model A shipped as basic switch, operating handle, shaft and fuse or no-fuse kit. Model T shipped as basic switch and fuse or no-fuse kit.
② External operating handle, shaft and fuse or no-fuse kit required.
③ Fuse or no-fuse kit required.
④ Includes fuse clips and Micarta barriers.
⑤ Will also accept non-rejection type current limiting fuses:
Bussmann: 15–60 A type KTN and KTS (ferrule type), 65–200 A type KTN and KTS (blade type)
Chase Shawmut: 15–60 A type 1 (ferrule type), 65–200 A type 3 (blade type)
Federal Pacific Electric®: 15–200 A types NCL and SCL
⑥ Special 60 A switch has same dimension as 30 A Visi-Flex switch. Standard 60 A switch has same dimension as 100 A Visi-Flex switch.
⑦ Rated 600 V.

### *Special Switches and Fuse Clips*

#### Visi-Flex Switches with Auxiliary Switch Internally Mounted

**Note:** Basic switch only. Also order no-fuse kit, fuse kit, operating handle and shaft as required.

| Ampere Rating | Catalog Number (for use without fuses) | Catalog Number (for use with fuses) |
|---|---|---|
| **Model A** | | |
| 30 | **2607D63G04** | **2607D63G03** |
| Special 60 | **2607D63G08** | **2607D63G07** |
| 60 | **2607D66G16** | **2607D66G15** |
| 100 | **2607D66G20** | **2607D66G19** |
| **Model T** | | |
| 30 | **371D392G04** | **371D392G03** |
| Special 60 | **371D392G08** | **371D392G07** |
| 60 | **657D780G14** | **657D780G13** |
| 100 | **657D780G18** | **657D780G17** |

### *Special Fuse Kits*

**Fuse Clip Kit**

**No Fuse Kit**

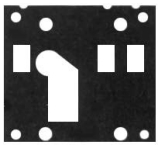

#### Current Limiting, Class J

**Note:** For Model A and/or T switches. Order in place of standard fuse clips.

| Switch Type, Rating | Fuse Kit Rating | Catalog Number |
|---|---|---|
| **Model A** | | |
| 30 | 30 A/600 V | **503C690G01** |
| Special 60 | 60 A/600 V | **503C690G02** |
| | 100 A/600 V | **503C690G03** |
| 60 | 30 A/600 V | **503C690G15** |
| 100 | 60 A/600 V | **503C690G16** |
| | 100 A/600 V | **503C690G17** |
| | 200 A/600 V | **503C690G18** |
| **Model T** | | |
| 30 | 30 A/600 V | **503C690G04** |
| Special 60 | 60 A/600 V | **503C690G05** |
| | 100 A/600 V | **503C690G06** |
| 60 | 30 A/600 V | **503C690G19** |
| 100 | 60 A/600 V | **503C690G20** |
| | 100 A/600 V | **503C690G21** |
| | 200 A/600 V | **503C690G22** |

## Options and Accessories

#### Fuse Kits and Shaft

| Description | Catalog Number |
|---|---|
| **No fuse kits (for Models A or T)** | |
| 30, special 60 A switches | **313C590G14** |
| 60, 100 A switches | **313C363G11** |
| Model A external operating handle | **504C323G07** |
| **Model A Standard Shaft** | |
| 30, special 60 A switches | **2607D64G01** ① |
| 60, 100 A switches | **2607D65G01** ② |

#### Auxiliary Switch Kits for Model A and T Switches

**Note:** Permits field mounting of an auxiliary switch for separate control circuit applications. Provides an SPDT switch with 1A and/or 1B contacts. Includes three identified 18-inch soldered leads.

| For Use With | Complete Kit Catalog Number |
|---|---|
| 30 and special 60 A switch | **315C293G01** ③ |
| 60 and 100 A switch | **315C293G01** ③ |

#### Extra Long Vari-Depth Shaft for Model A Switches

**Note:** Order in place of standard shaft when required.

| Switch Ampere Rating | Panel Depth in Inches (mm) Long Shaft | Catalog Number |
|---|---|---|
| 30 | 8.19–13.06 (208.0–331.7) ④ | **2607D65G02** |
| Special 60 | 8.19–13.06 (208.0–331.7) ④ | **2607D65G02** |
| 60 | 9.41–14.3 (239.0–358.9) | **2607D65G02** |
| 100 | 9.41–14.3 (239.0–358.9) | **2607D65G02** |

***Notes***

① For use with panels 5.06–8.19 inches (128.5–208.0 mm) deep.
② For use with panels 5.19–9.97 inches (131.8–253.2 mm) deep.
③ Order Instruction Sheet 12641.
④ For panel depth of 8.19–9.94 inches (208.0–252.5 mm), a minimum of 1.75 inch must be cut from bottom of shaft.

1

## Technical Data and Specifications

### Maximum Horsepower Ratings

| Fuse Clip Ratings | Maximum Horsepower Ratings 120 Vac Standard | 120 Vac Time Delay | 240 Vac Standard | 240 Vac Time Delay | 480 Vac Standard | 480 Vac Time Delay | 600 Vac Standard | 600 Vac Time Delay | 250 Vdc |
|---|---|---|---|---|---|---|---|---|---|
| **30 A Switch** | | | | | | | | | |
| Unfused | 3 | — | 7-1/2 | — | 20 | — | 25 | — | 5 |
| 30 A/250 V | 1-1/2 | 3 | 3 | 7-1/2 | — | — | — | — | 5 |
| 60 A/250 V | 3 | — | 5 | — | — | — | — | — | 5 |
| 100 A/250 V | 3 | — | 5 | — | — | — | — | — | 5 |
| 30 A/600 V | — | — | — | — | 5 | 15 | 7-1/2 | 20 | 5 |
| 60 A/600 V | — | — | — | — | 15 | — | 20 | — | 5 |
| **60 A Switch (and Special 60 Ampere Switch)** | | | | | | | | | |
| Unfused | 7-1/2 | — | 20 | — | 40 | — | 50 | — | 10 |
| 30 A/250 V | 1-1/2 | 3 | 3 | 7-1/2 | — | — | — | — | 5 |
| 60 A/250 V | 3 | 7-1/2 | 7-1/2 | 15 | — | — | — | — | 10 |
| 100 A/250 V | — | — | 15 | — | — | — | — | — | 10 |
| 200 A/250 V ① | — | — | 15 | — | — | — | — | — | — |
| 30 A/600 V | — | — | — | — | 5 | 15 | 7-1/2 | 20 | 5 |
| 60 A/600 V | — | — | — | — | 15 | 30 | 15 | 50 | 10 |
| 100 A/600 V ① | — | — | 15 | — | 25 | 30 | 30 | 50 | 10 |
| **100 A Switch** | | | | | | | | | |
| Unfused | 15 | — | 30 | — | 60 | — | 75 | — | 20 |
| 30 A/250 V | 1-1/2 | 3 | 3 | 7-1/2 | — | — | — | — | 5 |
| 60 A/250 V | 3 | 7-1/2 | 7-1/2 | 15 | — | — | — | — | 10 |
| 100 A/250 V | 15 | 15 | 15 | 30 | — | — | — | — | 20 |
| 200 A/250 V | 15 | 15 | 15 | 30 | — | — | — | — | 20 |
| 30 A/600 V | — | — | — | — | 5 | 15 | 7-1/2 | 20 | — |
| 60 A/600 V | — | — | — | — | 15 | 30 | 15 | 50 | — |
| 100 A/600 V | — | — | — | — | 25 | 60 | 30 | 75 | — |
| 200 A/600 V | — | — | — | — | 25 | 60 | 30 | 75 | — |

***Note***

① Does not apply to special 60 A switch since these fuse clips cannot be added.

Complete Operating Mechanism—C361NE1

## Contents


| *Description* | *Page* |
|---|---|
| Product Overview | **V2-T1-2** |
| General-Duty | **V2-T1-25** |
| Heavy-Duty | **V2-T1-30** |
| Heavy-Duty Double-Door Safety Switch | **V2-T1-41** |
| Six-Pole Switches | **V2-T1-45** |
| Double-Throw Switches | **V2-T1-48** |
| EnviroLine Stainless Steel Switch | **V2-T1-55** |
| Window Switches | **V2-T1-59** |
| Receptacle Switches | **V2-T1-62** |
| Non-Metallic KRYDON Switch | **V2-T1-64** |
| Shunt Trip Safety Switch | **V2-T1-67** |
| NEMA 7/9—Hazardous Location Disconnect Switch | **V2-T1-70** |
| Quick-Connect Switches | **V2-T1-72** |
| DC Disconnect Switches | **V2-T1-77** |
| Mill-Duty Rated, Heavy-Duty Safety Switch | **V2-T1-86** |
| Elevator Control Switch | **V2-T1-88** |
| Auxiliary Power Heavy-Duty Safety Switch | **V2-T1-91** |
| Left-Handed Safety Switch | **V2-T1-95** |
| Heavy-Duty Surge Switch | **V2-T1-96** |
| EZ Isolator™ (OLI) Switch | **V2-T1-98** |
| Pringle Bolted Pressure Switch | **V2-T1-101** |
| Type DS, Fusible and Non-Fusible | **V2-T1-104** |
| Type Visi-Flex DE-ION | **V2-T1-107** |
| Flange Mounted—Variable Depth | |
| Product Selection | **V2-T1-112** |
| Accessories | **V2-T1-113** |
| Dimensions | **V2-T1-114** |
| Flange Mounted—Fixed Depth | **V2-T1-115** |


## Flange Mounted—Variable Depth

### Product Description

Type C361 disconnect switches are suitable for installation in control enclosures having a right-hand flange. Fusible disconnect switches will accept R fuses as standard. Field installable rejection kits are supplied as standard on 100 and 200 A clips. For 30 and 60 A rejection clips, see footnote ④ on next page. The switch is UL component recognized for use on systems with up to 200,000 rms symmetrical amperes available fault current when Class R clips are supplied.

### Standards and Certifications

- UL—Component File E55492
- CSA—LR353-439

1

## Product Selection

C361NE1

### Operating Mechanism Variable Depth with Disconnect Switch—Right-Hand Mounting

| Disconnect Switch Size (Amperes) | Variable Depth Mtg. Range Min./Max. (Inches) ① | Maximum Horsepower Ratings ② AC System Volts (Motor Volts) 208 (200) | 240 (230) | 480 (460) | 600 (575) | DC Using Two Poles 250 V Max. | Fuse Clip Rating (Amperes) Non-Interchangeable Type for Class H, J, K or R Type Fuses Only 250 V | 600 V | Switch and Operating Mechanism Only DOES NOT Include Handle Catalog Number | Switch and Operating Mechanism with 4-Inch Handle ③ For NEMA 1 or 12 Enclosure Catalog Number | For NEMA 4 Enclosure Catalog Number |
|---|---|---|---|---|---|---|---|---|---|---|---|
| 30 | 7 to 16 | 7-1/2 | 7-1/2 | 15 | 20 | 5 | Non-fusible | | **C361NC** | **C361NC1** | **C361NC2** |
| | | | | | | | 30 | — | **C361SC21** | **C361SC121** ④ | **C361SC221** ④ |
| | | | | | | | 60 | 30 | **C361SC61** | **C361SC161** ④ | **C361SC261** ④ |
| 60 | 7 to 16 | 15 | 15 | 30 | 50 | 10 | Non-fusible | | **C361ND** | **C361ND1** | **C361ND2** |
| | | | | | | | 60 | 30 | **C361SD22** | **C361SD122** ④ | **C361SD222** ④ |
| | | | | | | | — | 60 | **C361SD62** | **C361SD162** ④ | **C361SD262** ④ |
| 100 | 7 to 16 | 25 | 30 | 60 | 75 | 20 | Non-fusible | | **C361NE** | **C361NE1** | **C361NE2** |
| | | | | | | | 100 | 100 | **C361SE263** | **C361SE1263** | **C361SE2263** |
| 200 | 7 to 16 | 40 | 60 | 125 | 150 | 40 | Non-fusible | | **C361NF1** | **C361NF1** | **C361NF2** |
| | | | | | | | 200 | 200 | **C361SF264** | **C361SF1264** | **C361SF2264** |

C361H1

### Handle Only

| Application | Operating Handle Length in Inches (mm) | NEMA Type Enclosure | Catalog Number |
|---|---|---|---|
| For use with 30, 60 100 and 200 A disconnect switches | 4.00 (101.6) | 1-12 | **C361H1** |
| | 4.00 (101.6) | 4 | **C361H2** |
| | 6.00 (152.4) | 1-12 | **C361H3** |
| | 6.00 (152.4) | 4 | **C361H4** |

***Notes***

① Dimension shown is from panel to flange surface.
② Refers to rating of switch only.
③ Components individually boxed and shipped in overpack carton.
④ For rejection clips, add Suffix Letter **R** to listed Catalog Number. Example: C361SC121**R**.

## Accessories

### *Type C361 NEMA 12 Safety Door Hardware*

Type C361 door hardware kits are designed to function with all C361 and C371 disconnect switches and circuit breaker operating mechanisms.

These kits are designed for use with small enclosures up to 40 inches (1016 mm), intermediate 40–60 inches (1016–1524 mm) or larger floor cases over 60 inches (1524 mm) to provide enclosure sealing and protection against unauthorized entry.

These kits can be used on enclosure flanges with material thickness ranging from 16 gauge through 3/16 inches with flanges on the right side only. Door hardware kits are to be installed in a commercially available enclosure. Consult the enclosure manufacturer application data for proper kit selection.

**NEMA 12 Safety Door Hardware**

### Type C361 NEMA 12 Safety Door Hardware

| Handle Length (Inches) | Catalog Number ① |
|---|---|
| 4 | **C361KJ4** |
| 6 | **C361KJ6** |
| Roller Latch ② | **C361KR** |

### *Interlocks and Connecting Rod*

#### Electrical Interlocks

| Circuit | Catalog Number |
|---|---|
| 1NO-1NC | **DS200EK1** |
| 2NO-2NC | **DS200EK2** |

#### Connecting Rods—Increase Maximum Allowable Depth by 5 Inches

| Application | Catalog Number |
|---|---|
| Disconnect switches 30, 60, 100 and 200 A<br>Circuit breakers 150, 250 and 400 A | **C371CS1** |
| Circuit breakers 600, 800 and 1200 A | **C371CS2** |

***Notes***

① The 1/4-inch x 1/2-inch standard mill rectangular locking bar is not supplied with these kits.
② Third roller latch for use with 4 or 6-inch handle when three-point latching is required.

1

## Dimensions

Approximate Dimensions in Inches (mm)

### Mounting Dimension Requirements in Inches (mm)

| Disconnect Switch Type | A | B | C | D | E | F | G |
|---|---|---|---|---|---|---|---|
| 30 A and 60 A non-fusible | See dimensions below | See dimensions below | 1.56 (39.6) | 0.96 (24.4) | 4.00 (101.6) | 3.50 (88.9) | 7.12 (180.8) |
| 30 A and 60 A fusible | | | 1.56 (39.6) | 0.96 (24.4) | 4.00 (101.6) | 3.50 (88.9) | 9.75 (247.7) |
| 100 A non-fusible | | | 1.75 (44.5) | 1.10 (27.9) | 5.50 (139.7) | 3.38 (85.9) | 7.12 (180.8) |
| 100 A fusible | | | 1.75 (44.5) | 1.10 (27.9) | 5.50 (139.7) | 3.38 (85.9) | 11.88 (301.8) |
| 200 A non-fusible and fusible | | | 3.34 (84.8) | 0.63 (16.0) | 8.50 (215.9) | 1.84 (46.7) | 15.50 (393.7) |

### Mounting Dimension Requirements

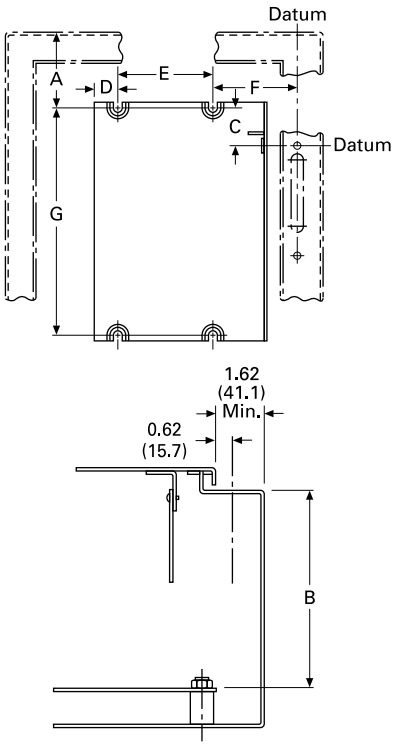


### Line Lug Data

| Disconnect Switch Size | Wire Size |
|---|---|
| 30 A | #2–14 Cu/Al |
| 60 A | #2–14 Cu/Al |
| 100 A | 1/0–14 Cu/Al |
| 200 A | 250 kcmil–#6 Cu/Al |

**Dimension A** = The required wire bending spacing selected from Article 430.10 of the National Electrical Code.

**Dimension B** = Minimum or maximum depth from inside of flange holding operating handle to panel where disconnect switch is mounted (variable 7 to 16 inches).

Fixed Depth Application

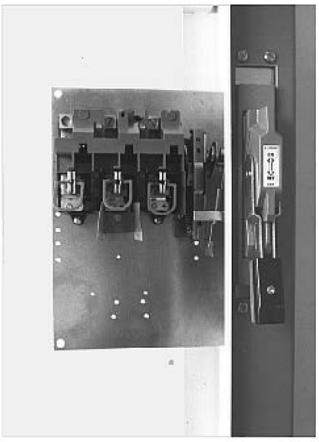

## Contents


| Description | Page |
|---|---|
| Product Overview | V2-T1-2 |
| General-Duty | V2-T1-25 |
| Heavy-Duty | V2-T1-30 |
| Heavy-Duty Double-Door Safety Switch | V2-T1-41 |
| Six-Pole Switches | V2-T1-45 |
| Double-Throw Switches | V2-T1-48 |
| EnviroLine Stainless Steel Switch | V2-T1-55 |
| Window Switches | V2-T1-59 |
| Receptacle Switches | V2-T1-62 |
| Non-Metallic KRYDON Switch | V2-T1-64 |
| Shunt Trip Safety Switch | V2-T1-67 |
| NEMA 7/9—Hazardous Location Disconnect Switch | V2-T1-70 |
| Quick-Connect Switches | V2-T1-72 |
| DC Disconnect Switches | V2-T1-77 |
| Mill-Duty Rated, Heavy-Duty Safety Switch | V2-T1-86 |
| Elevator Control Switch | V2-T1-88 |
| Auxiliary Power Heavy-Duty Safety Switch | V2-T1-91 |
| Left-Handed Safety Switch | V2-T1-95 |
| Heavy-Duty Surge Switch | V2-T1-96 |
| EZ Isolator™ (OLI) Switch | V2-T1-98 |
| Pringle Bolted Pressure Switch | V2-T1-101 |
| Type DS, Fusible and Non-Fusible | V2-T1-104 |
| Type Visi-Flex DE-ION | V2-T1-107 |
| Flange Mounted—Variable Depth | V2-T1-111 |
| Flange Mounted—Fixed Depth | |
| Accessories | V2-T1-116 |
| Technical Data and Specifications | V2-T1-116 |
| Dimensions | V2-T1-116 |


## Flange Mounted—Fixed Depth

### Product Description

Type C361 disconnect switches are suitable for installation in control enclosures having a right-hand flange. Fusible disconnect switches will accept R fuses as standard. Field installable rejection kits are supplied as standard on 100 and 200 A clips. For 30 and 60 A rejection clips, see **Page V2-T1-112**. The switch is UL component recognized for use on systems for use on systems with up to 200,000 rms symmetrical amperes available fault current when Class R clips are supplied.

- Minimum depth—flange to panel
  - 30–60 A: 6.50 inches
  - 100 A: 7 inches

### Product Selection

Fixed Depth Application

**Operating Mechanism Fixed Depth with Disconnect Switch—Right-Hand Mounting**

| Disconnect Switch Size (Amperes) | Maximum Horsepower Ratings ① AC System Volts (Motor Volts) 208 (200) | 240 (230) | 480 (460) | 600 (575) | DC Using Two Poles 250 V Maximum | Fuse Clip Rating (Amperes) Non-Interchangeable Type for Class H, J, K or R Type Fuses Only 250 V | 600 V | Switch and Operating Mechanism with 4-Inch Handle For NEMA 1 or 12 Enclosure Catalog Number |
|---|---|---|---|---|---|---|---|---|
| 30 | 7-1/2 | 7-1/2 | 15 | 20 | 5 | Non-fusible | | C361FNC1 |
| | | | | | | 30 | — | C361FSC121 ② |
| | | | | | | 60 | 30 | C361FSC161 ② |
| 60 | 15 | 15 | 30 | 50 | 10 | Non-fusible | | C361FND1 |
| | | | | | | 60 | 30 | C361FSD122 ② |
| | | | | | | — | 60 | C361FSD162 ② |
| 100 | 25 | 30 | 60 | 75 | 20 | Non-fusible | | C361FNE1 |
| | | | | | | 100 | 100 | C361FSE1263 |

***Notes***

① Refers to rating of switch only.

② For Rejection Clips, add Suffix Letter **R** to listed Catalog Number. Example: C361FSC121**R**.

## Accessories

### Electrical Interlocks

| Circuit | Catalog Number |
|---|---|
| 1NO-1NC | **DS200EK1** |
| 2NO-2NC | **DS200EK2** |

## Technical Data and Specifications

### Line Lug Data

| Disconnect Switch Size | Wire Size |
|---|---|
| 30 A | #2–14 Cu/Al |
| 60 A | #2–14 Cu/Al |
| 100 A | 1/0–14 Cu/Al |
| 200 A | 250 kcmil–#6 Cu/Al |

## Dimensions

Approximate Dimensions in Inches (mm)

### Frame Size

| Description | A | B | C | D | E |
|---|---|---|---|---|---|
| 30–60 A disconnect switch | 8.63 (219.2) | 11.38 (289.1) | 6.50 (165.1) | 1.50 (38.1) | 9.50 (241.3) |
| 150 A circuit breaker | 8.63 (219.2) | 11.38 (289.1) | 6.50 (165.1) | 1.50 (38.1) | 9.50 (241.3) |
| 100 A disconnect switch | 9.88 (251.0) | 13.38 (339.9) | 7.00 (177.8) | 1.25 (31.8) | 11.75 (298.5) |
| 250 A circuit breaker | 9.88 (251.0) | 13.38 (339.9) | 7.00 (177.8) | 1.25 (31.8) | 11.75 (298.5) |
| 400 A circuit breaker | 9.88 (251.0) | 13.38 (339.9) | 7.00 (177.8) | 1.25 (31.8) | 11.75 (298.5) |

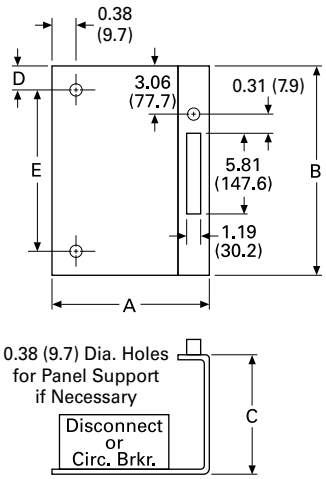

Enclosed Circuit Breakers—Power Defense

## Contents


| *Description* | *Page* |
|---|---|
| Enclosed Circuit Breakers—Power Defense | |
| Features, Benefits and Functions | **V2-T1-118** |
| Standards and Certifications | **V2-T1-118** |
| Power Xpert Enclosed Circuit Breakers | **V2-T1-124** |
| Enclosed NRX Power Circuit Breakers | **V2-T1-130** |
| Flex Center | **V2-T1-134** |


## Enclosed Circuit Breakers—Power Defense

### Product Description

Eaton's Power Defense™ circuit breakers are enclosed to meet the needs of various applications. Ratings are 15–1200 A, NEMA 1, 3R, 12/3R and 4X.

### Application Description

***NEMA 1 General Purpose***

- Surface mount up to 1200 A or flush mount up to 400 A
- Designed for indoor use in commercial buildings, apartment buildings, and other areas where a general-purpose enclosure is applicable
- Front operable and is capable of being padlocked in the OFF position
- UL listed as suitable for service entrance application

***NEMA 1 General Purpose***

***NEMA 3R Rainproof***

- Designed for outdoor use to serve as a main disconnect and protective device for feeder circuits
- Side operable and is capable of being padlocked in the OFF position
- UL listed as suitable for service entrance application

***NEMA 3R Rainproof***

***NEMA 12/3R Dustproof***

- No knockouts or other openings
- Designed for severe conditions where oil, coolant, dust and other foreign material may exist
- Side operable and is capable of being padlocked in the OFF position
- UL listed as suitable for service entrance application
- NEMA 3R rating achieved by removing screw in the bottom endwall

***NEMA 12/3R Dustproof***

***NEMA 4/4X Waterproof***

- No knockouts or other openings
- Designed for use in dairies, borax mines, breweries, paper mills and other process industries
- Side operable and is capable of being padlocked in the OFF position
- UL listed as suitable for service entrance application

***NEMA 4/4X Waterproof***

## Features, Benefits and Functions

***Standard Features***

- NEMA Type 1, 3R, 12/3R, 4X
- Padlockable in the OFF position
- Fully assembled from the factory, including enclosure, breaker and other applicable components

***Optional Features***

- PXR 10 and PXR 20 electronic trip units available
- For ground fault applications, LSIG protection is available
- Lock ON provision available
- Modifications available such as custom paint, key interlocks and more
- Enclosures available for 100% rated breakers (400 A–600 A, 800 A–1200 A)

For additional requests or options, call the Flex Center at 888-329-9272 or email FlexSwitches@eaton.com.

## Standards and Certifications

- UL 489
- CSA 22.2, No. 4 and No. 5
- NEMA 250

***Seismic Qualifications***

- Enclosed circuit breakers meet or exceed the requirements of Uniform Building Code (UBC) and California Department of Health Care Access and Information (HCAI), formerly the Office of Statewide Health Planning and Development (OSHPD)

## Catalog Number Selection

### Assembled Enclosed Circuit Breakers

**S 1 3 S 100 D T J - CCSP**

**NEMA Enclosure**

- **S** = NEMA 1 surface
- **F** = NEMA 1 flush ①
- **R** = NEMA 3R
- **D** = NEMA 12/3R
- **W** = NEMA 4X (304) stainless
- **X** = NEMA 4X (316) stainless
- **T** = NEMA 1, 100% rated
- **Q** = NEMA 3R, 100% rated

**Breaker Frame**

- **1** = Frame 1 (15–125 A)
- **2** = Frame 2 (15–225 A)
- **3** = Frame 3 (45–600 A)
- **4** = Frame 4 (300–800 A)
- **5** = Frame 5 (320–1200 A)

**Number of Poles**

- **3** = Three-pole

**kAIC Performance**

- **S** = Standard
  35/50 at 480 Vac ②
  18/25 at 600 Vac ③
- **H** = High
  65 at 480 Vac
  25/35 at 600 Vac ④
- **C** = Highest
  100 at 480 Vac ⑤

**Ampere Rating—Thermal-Magnetic**

- **015** = 15 A
- **020** = 20 A
- **025** = 25 A
- . . .
- **25H** ⑦ = 250 A ⑥
- **30H** ⑦ = 300 A ⑥
- **35H** ⑦ = 350 A ⑥
- **40H** ⑦ = 400 A ⑥
- **700** = 700 A
- **800** = 800 A
- **12X** = 1200 A

**Ampere Rating—Electronic Trip Unit (Trip Settings)**

- **060** = 15 A, 16 A, 20 A, 25 A, 30 A, 35 A, 40 A, 45 A, 50 A, 60 A
- **100** = 32 A, 35 A, 40 A, 50 A, 60 A, 63 A, 70 A, 80 A, 90 A, 100 A
- **125** = 45 A, 50 A, 60 A, 63 A, 70 A, 80 A, 90 A, 100 A, 110 A, 125 A
- **150** = 50 A, 60 A, 63 A, 70 A, 80 A, 90 A, 100 A, 110 A, 125 A, 150 A
- **225** = 80 A, 90 A, 100 A, 110 A, 125 A, 150 A, 160 A, 175 A, 200 A, 225 A
- **250** = 90 A, 100 A, 110 A, 125 A, 150 A, 160 A, 175 A, 200 A, 225 A, 250 A
- **400** = 160 A, 175 A, 200 A, 225 A, 250 A, 275 A, 300 A, 320 A, 350 A, 400 A
- **25H** ⑦ = 90 A, 100 A, 110 A, 125 A, 150 A, 160 A, 175 A, 200 A, 225 A, 250 A
- **40H** ⑦ = 160 A, 175 A, 200 A, 225 A, 250 A, 275 A, 300 A, 320 A, 350 A, 400 A
- **600** = 250 A, 275 A, 300 A, 320 A, 350 A, 400 A, 450 A, 500 A, 550 A, 600 A
- **800** = 320 A, 350 A, 400 A, 450 A, 500 A, 550 A, 600 A, 630 A, 700 A, 800 A
- **12X** = 500 A, 550 A, 600 A, 630 A, 700 A, 800 A, 900 A, 1000 A, 1100 A, 1200 A

**Neutral**

- **N** = With neutral
- **D** = No neutral

**Trip Unit**

- **T** = Thermal-magnetic
- **1** = PXR 10 LSI
- **2** = PXR 20 LSI
- **3** = PXR 20 LSIG

**Options/Modifications/Accessories** ⑧

- **00NN** = No alarm, no aux
- **00AA** = No alarm, 1NO aux
- **00AB** = No alarm, 1NC aux
- **00AC** = No alarm, 1NO/1NC aux
- **00AD** = No alarm, 2NO aux
- **00AE** = No alarm, 2NC aux
- **00A1** = No alarm, 2NO/2NC aux
- **00A2** = No alarm, 4NO aux
- **00A3** = No alarm, 4NC aux
- **00B1** = 2NO/2NC alarm, no aux ⑨
- **00BA** = 1NO alarm, no aux
- **00CA** = 1NO alarm, 1NO aux
- **00BB** = 1NC alarm, no aux
- **00CB** = 1NC alarm, 1NC aux
- **00BC** = 1NO/1NC alarm, no aux
- **00CC** = 1NO/1NC alarm, 1NO/1NC aux
- **00C1** = 1NO/1NC alarm, 2NO/2NC aux
- **00BD** = 2NO alarm, no aux
- **00CD** = 2NO alarm, 2NO aux
- **00C2** = 2NO alarm, 4NO aux
- **00BE** = 2NC alarm, no aux
- **00CE** = 2NC alarm, 2NC aux
- **00C3** = 2NC alarm, 4NC aux
- **00SP** = Shunt trip (120 Vac)
- **00SN** = Shunt trip (24 Vdc)
- **00NP** = Nameplate
- **00LO** = Lock on
- **00SE** = Service entrance (Canada only)
- **00TK** = Kirk key/trapped key

**Terminals** ⑦

- **J** = Standard terminals
- **1** = Optional terminal 1
- **2** = Optional terminal 2
- **3** = Optional terminal 3
- **4** = Optional terminal 4
- **5** = Optional terminal 5

***Notes***

① 400 A maximum.
② 35 kAIC for Frames 1, 2, 3 and 4. 50 kAIC for Frame 5.
③ 18 kAIC for Frames 1, 2, 3 and 4. 25 kAIC for Frame 5.
④ 25 kAIC for Frames 1 and 2. 35 kAIC for Frames 3, 4 and 5.
⑤ Applicable only for Frames 2 and 3.
⑥ 600 A Frame 3 and enclosures only.
⑦ High override. See terminal selection charts on **page V2-T1-122**.
⑧ More combinations and options are available.
⑨ Frames 1 and 5 only.

1

## Product Selection

### PD Breaker Enclosures—Enclosure Only

| Breaker Frame | Breaker Maximum Ampere Rating | Number of Poles | NEMA Rating | Catalog Number |
|---|---|---|---|---|
| PD1 | 125 | 2/3 | NEMA 1 | **SPD1K0125** |
| | | | NEMA 1 flush | **FPD1K0125** |
| | | | NEMA 3R | **RPD1K0125** |
| | | | NEMA 12/3R | **DPD1K0125** |
| | | | NEMA 4X | **WPD1K0125** |
| PD2 | 225 | 2 | NEMA 1 | **SPD2J0225** |
| | | | NEMA 1 flush | **FPD2J0225** |
| | | 3 | NEMA 1 | **SPD2K0225** |
| | | | NEMA 1 flush | **FPD2K0225** |
| | | 2/3 | NEMA 3R | **RPD2K0225** |
| | | | NEMA 12/3R | **DPD2K0225** |
| | | | NEMA 4X | **WPD2K0225** |
| PD3 (400 A) | 400 | 2/3 | NEMA 1 | **SPD3K0400** |
| | | | NEMA 1 flush | **FPD3K0400** |
| | | | NEMA 3R | **RPD3K0400** |
| | | | NEMA 12/3R | **DPD3K0400** |
| | | | NEMA 4X | **WPD3K0400** |
| | | | NEMA 1, 100% rated | **SPD3L0600** |
| | | | NEMA 3R, 100% rated | **RPD3L0600** |
| PD3 (600 A) | 600 | 2/3 | NEMA 1 | **SPD3K0600** |
| | | | NEMA 3R | **RPD3K0600** |
| | | | NEMA 12/3R | **DPD3K0600** |
| | | | NEMA 4X | **WPD3K0600** |
| | | | NEMA 1, 100% rated | **SPD3L0600** |
| | | | NEMA 3R, 100% rated | **RPD3L0600** |
| PD4 | 800 | 2/3 | NEMA 1 | **SPD4K0800** |
| | | | NEMA 3R | **RPD4K0800** |
| | | | NEMA 12/3R | **DPD4K0800** |
| | | | NEMA 4X | **WPD4K0800** |
| PD5 | 1200 | 2/3 | NEMA 1 | **SPD5K1200** |
| | | | NEMA 3R | **RPD5K1200** |
| | | | NEMA 12/3R | **DPD5K1200** |
| | | | NEMA 4X | **WPD5K1200** |
| | | | NEMA 1, 100% rated | **SPD5L1200** |
| | | | NEMA 3R, 100% rated | **RPD5L1200** |

### Neutral Kits

| PD Breaker Enclosures | | Neutral Kits<br>Standard Neutral Kits | | | Neutral Kits with Current Sensor | | |
|---|---|---|---|---|---|---|---|
| Breaker Frame | Breaker Maximum Ampere Rating | Catalog Number | Neutral Lug Size | Ground Lug Size | Catalog Number | Neutral Lug Size | Ground Lug Size |
| PD1 | 125 | **ECB225NK** | (1) 250MCM–6 | (1) 14–4/0 | — | — | — |
| PD2 | 225 | **ECB225NK** | (1) 250MCM–6 | (1) 14–4/0 | **ECB225NSK** | (1) 250MCM–6 | (1) 14–4/0 |
| PD3 (400 A) | 400 | **ECB400NK** | (1) 750MCM–1/0 or (2) 300MCM–1/0 | (2) 3/0–250MCM | **ECB400NSK** | (1) 750MCM–1/0 | (2) 3/0–250 |
| PD3 (600 A) | 600 | **ECB600NK** | (1) 750MCM–1/0 and (1) 600MCM–2 | (2) 2–500MCM | **ECB600NSK** | (1) 750MCM–1/0 (1) 600MCM–2 | (2) 2–500 |
| PD4 | 800 | **ECB800NK** | (4) 750MCM–1/0 | (3) 3/0–400MCM | **ECB800NSK** | (4) 750MCM–1/0 | (3) 3/0–400 |
| PD5 | 1200 | **ECB800NK** | (4) 750MCM–1/0 | (3) 3/0–400MCM | **ECB1200NSK** | (4) 750MCM–1/0 | (3) 3/0–400 |

## Trip Units

| Frame | kAIC Rating | Trip Unit ① | Terminals ② | Catalog Number Circuit Breaker ③④ | Frame | Trip Unit ③④ |
|---|---|---|---|---|---|---|
| 1 | Standard | Thermal Magnetic | Standard | **PDG13GXXXXTFFJ** | — | — |
| | | | Optional | **PDG13GXXXXTFFN** | | |
| | High | Thermal Magnetic | Standard | **PDG13MXXXXTFFJ** | — | — |
| | | | Optional | **PDG13MXXXXTFFN** | | |
| 2 | Standard | Thermal Magnetic | "J" Standard | **PDG23GXXXXTFFJ** | — | — |
| | | PXR10 LSI | | **PDG23GYYYYB2NJ** | | |
| | | PXR20 LSI | | **PDG23GYYYYE2NJ** | | |
| | | PXR20 LSIG | | **PDG23GYYYYE3RJ** | | |
| | High | Thermal Magnetic | Optional | **PDG23GXXXXTFFN** | — | — |
| | | PXR10 LSI | | **PDG23GYYYYB2NN** | | |
| | | PXR20 LSI | | **PDG23GYYYYE2NN** | | |
| | | PXR20 LSIG | | **PDG23GYYYYE3RN** | | |
| 3 (400 A and 600 A) | Standard | Thermal Magnetic | Any | — | 400 A: **PDG33G0400FNNN** 600 A: **PDG33G0600FNNN** | **PDG3XTFA3XXXX** |
| | | PXR10 LSI | | | | **PDG3XPXR3YYYYB2N** |
| | | PXR20 LSI | | | | **PDG3XPXR3YYYYE2N** |
| | | PXR20 LSIG | | | | **PDG3XPXR3YYYYE3R** |
| | High | Thermal Magnetic | Any | — | For 400 A: **PDG33M0400FNNN** For 600 A: **PDG33M0600FNNN** | **PDG3XTFA3XXXX** |
| | | PXR10 LSI | | | | **PDG3XPXR3YYYYB2N** |
| | | PXR20 LSI | | | | **PDG3XPXR3YYYYE2N** |
| | | PXR20 LSIG | | | | **PDG3XPXR3YYYYE3R** |
| 3 (400 A 100% rated and 600 A 100% rated) | Standard | Thermal Magnetic | Any | — | 400 A 100% rated: **PDF33G0400FNNN** 600 A 100% rated: **PDF33G0600FNNN** | **PDG3XTFA3XXXX** |
| | | PXR10 LSI | | | | **PDG3XPXR3YYYYB2N** |
| | | PXR20 LSI | | | | **PDG3XPXR3YYYYE2N** |
| | | PXR20 LSIG | | | | **PDG3XPXR3YYYYE3R** |
| | High | Thermal Magnetic | Any | — | For 400 A: **PDF33M0400FNNN** For 600 A: **PDF33M0600FNNN** | **PDG3XTFA3XXXX** |
| | | PXR10 LSI | | | | **PDG3XPXR3YYYYB2N** |
| | | PXR20 LSI | | | | **PDG3XPXR3YYYYE2N** |
| | | PXR20 LSIG | | | | **PDG3XPXR3YYYYE3R** |
| 4 | Standard | Thermal Magnetic | Any | — | **PDG43G0800FNNN** | **PDG4XTFA3XXXX** |
| | | PXR10 LSI | | | | **PDG4XPXR30800B2N** |
| | | PXR20 LSI | | | | **PDG4XPXR30800E2N** |
| | | PXR20 LSIG | | | | **PDG4XPXR30800E3R** |
| | High | Thermal Magnetic | Any | — | **PDG43M0800FNNN** | **PDG4XTFA3XXXX** |
| | | PXR10 LSI | | | | **PDG4XPXR30800B2N** |
| | | PXR20 LSI | | | | **PDG4XPXR30800E2N** |
| | | PXR20 LSIG | | | | **PDG4XPXR30800E3R** |
| 5 | Standard | PXR20 LSI | Any | **PDG53K0800E2NN** and **PDG53K1200E2NN** | — | — |
| | | PXR20 LSIG | | **PDG53K0800E3RN** and **PDG53K1200E3RN** | | |
| | High | PXR20 LSI | Any | **PDG53M0800E2NN** and **PDG53M1200E2NN** | — | — |
| | | PXR20 LSIG | | **PDG53M0800E3RN** and **PDG53M1200E3RN** | | |
| 5 (100% rated) | Standard | PXR20 LSI | Any | **PDF53K0800E2NN** and **PDF53K1200E2NN** | — | — |
| | | PXR20 LSIG | | **PDF53K0800E3RN** and **PDF53K1200E3RN** | | |
| | High | PXR20 LSI | Any | **PDF53M0800E2NN** and **PDF53M1200E2NN** | — | — |
| | | PXR20 LSIG | | **PDF53M0800E3RN** and **PDF53M1200E3RN** | | |

***Notes***

① LSI and LSIG refer to protection settings within the electronic trip unit. LSI = Long, Short and Instantaneous; LSIG = Long, Short, Instantaneous and Ground Fault.

② See "Terminal Selection" section for standard and optional terminals.

③ YYYY = For Electronic Trip Units, substitute YYYY for that range of trip settings. If they select the 60 A maximum for the Frame 2, then YYYY = 0060.

④ XXXX = For Thermal-Magnetic Trip Units, substitute XXXX for their amperage selection. If they select 100 A, then XXXX = 0100.

## Terminal Selection

| Frame | Ampere Rating | Size | Three-Pole Kit Catalog Number |
|---|---|---|---|
| **"J" Standard Terminal** | | | |
| 1 | 15–125 | (1) 14–3/0 | **PDG1X3T125** |
| 2 | 15–100 | (1) 14–1/0 | **PDG2X3T100** |
| | 110–225 | (1) 4–4/0 | **PDG2X3TA225** |
| 3 | 100–225 | (1) 3–350 kcmil | **PDG3X3TA300** |
| | 250–350 | (1) 250–500 kcmil | **PDG3X3TA350** |
| | 400 | (2) 3/0–250 kcmil | **PDG3X3TA400** |
| | 450–600 | (2) 2–500 kcmil | **PDG3X3TA630** |
| 4 | 300–700 | (2) 1–500 kcmil | **PDG4X3TA700** |
| | 800 | (3) 3/0–400 kcmil | **PDG4X3TA800** |
| 5 | 800 | (3) 3/0–400 kcmil | **(3) PDG5X1TA1000** |
| | 1200 | (4) 4/0–500 kcmil | **(3) PDG5X1TA1200** |

| Frame | Description | Size | Three-Pole Kit Catalog Number |
|---|---|---|---|
| **Optional Terminal** | | | |
| 1 | Option 1 | (1) 14–1/0 | **PDG1X3TA125** |
| 2 | Option 1 | (1) 6–300 kcmil | **PDG2X3TA225A** |
| | Option 2—Copper | (1) 4–4/0 | **PDG2X3T225** |
| 3 | Option 1—Copper | (1) 3–350 kcmil | **PDG3X3T300** |
| | Option 2—Copper | (1) 250–500 kcmil | **PDG3X3T350** |
| | Option 3—Copper | (2) 3/0–250 kcmil | **PDG3X3T400** |
| | Option 4—Copper | (1) 500–750 kcmil | **PDG3X3T401H** |
| | Option 5—Copper | (2) 2–500 kcmil | **PDG3X3T630** |
| 4 | Option 1 | (2) 500–750 kcmil | **PDG4X3TA801** |
| | Option 2—Copper | (2) 2/0–500 kcmil | **(3) PDG4X1T600** |
| | Option 3—Copper | (3) 3/0–300 kcmil | **(3) PDG4X1T800** |
| 5 | Option 1 | (2) 1–500 kcmil | **(3) PDG5X1TA700** |
| | Option 2 | (3) 500–750 kcmil | **(3) PDG5X1TA1201** |
| | Option 3—Copper | (2) 2/0–500 kcmil | **(3) PDG5X1T700** |
| | Option 4—Copper | (3) 3/0–500 kcmil | **(3) PDG5X1T1000** |
| | Option 5—Copper | (4) 3/0–400 kcmil | **(3) PDG5X1T1200** |

## Dimensions

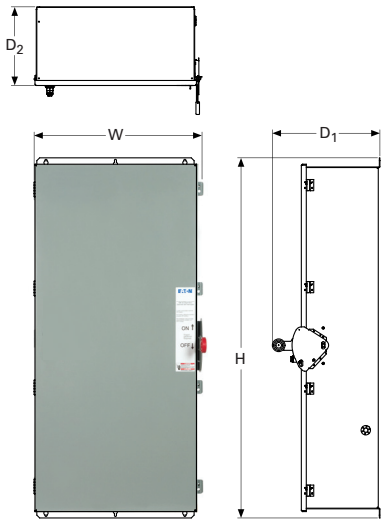


| Breaker Frame | NEMA Ratings | Maximum Ampere Rating | Height (H) | Width (W) | Depth (D1) | Depth (D2) | Approximate Weight in Lb (kg) |
|---|---|---|---|---|---|---|---|
| PD 1 | NEMA 1 | 125 | 18.50 (469.9) | 8.00 (203.2) | 10.35 (262.9) | 5.20 (132.1) | 13 (6) |
| | NEMA 3R, 12/3R, 4X | 125 | 18.50 (469.9) | 8.00 (203.2) | 11.05 (280.7) | 5.90 (149.9) | 14 (6) |
| PD 2 | NEMA 1 | 225 | 22.80 (579.1) | 8.00 (203.2) | 10.35 (262.9) | 5.20 (132.1) | 17 (8) |
| | NEMA 3R, 12/3R, 4X | 225 | 22.80 (579.1) | 8.00 (203.2) | 11.55 (293.4) | 6.40 (162.6) | 25 (11) |
| PD 3 | NEMA 1, 3R, 12/3R, 4X | 400 | 38.10 (967.7) | 10.60 (269.2) | 14.85 (377.2) | 9.70 (246.4) | 70 (32) |
| | NEMA 1 (surface only), 3R, 12/3R, 4X | 600 | 49.90 (1267.5) | 21.30 (541.0) | 13.55 (344.2) | 8.40 (213.4) | 93 (42) |
| | NEMA 1 100% | 600 | 53.63 (1362.3) | 26.48 (672.5) | 9.25 (234.9) | 7.54 (191.6) | 210 (95) |
| | NEMA 3R 100% | 600 | 53.63 (1362.3) | 26.48 (672.5) | 14.96 (380.0) | 9.82 (249.4) | 210 (95) |
| PD 4 | NEMA 1 (surface only), 3R, 12/3R, 4X | 800 | 60.00 (1524.0) | 20.80 (528.3) | 18.15 (461.0) | 13.00 (330.2) | 139 (63) |
| PD 5 | NEMA 1 (surface only) | 1200 | 60.00 (1524.0) | 20.80 (528.3) | 18.15 (461.0) | 13.00 (330.2) | 190 (86) |
| | NEMA 3R, 12/3R, 4X | 1200 | 60.00 (1524.0) | 27.80 (706.1) | 18.15 (461.0) | 13.00 (330.2) | 210 (95) |
| | NEMA 1 100% | 1200 | 70.99 (1803.0) | 29.62 (752.4) | 15.53 (394.6) | 13.81 (350.9) | 323 (147) |
| | NEMA 3R 100% | 1200 | 71.56 (1817.7) | 29.62 (752.4) | 18.91 (480.4) | 13.80 (350.5) | 323 (147) |

### *Raintight Hubs*

All rainproof enclosures 30–400 A are shipped with plate over cutout. Hubs are not supplied with screws on 30–400 A enclosures. Use screws from plate.

**Raintight Hubs**

## Raintight Tubs ①

| Hubs | Hub Diameter Inches | Hub Diameter mm | Catalog Number |
|---|---|---|---|
| **Small** | | | |
| For use with RPD1–RPD3 (400 A) enclosures | 0.75 | 19.1 | **DS075H1** |
| | 1.00 | 25.4 | **DS100H1** |
| | 1.25 | 31.8 | **DS125H1** |
| | 1.50 | 38.1 | **DS150H1** |
| | 2.00 | 50.8 | **DS200H1** |
| **Large** | | | |
| For use with RPD1–RPD3 (400 A) enclosures | 2.00 | 50.8 | **DS200H2** |
| | 2.50 | 63.5 | **DS250H2** |
| | 3.00 | 76.2 | **DS300H2** |

***Note***

① Myers hubs, Cat. No. ST–1 through 10, zinc, aluminum or stainless may be used on Type 3R, 12, 4X enclosures.

**Power Xpert Enclosed Circuit Breakers**

## Contents


| *Description* | *Page* |
|---|---|
| Enclosed Circuit Breakers—Power Defense | **V2-T1-117** |
| Power Xpert Enclosed Circuit Breakers | |
| Features | **V2-T1-125** |
| Standards and Certifications | **V2-T1-125** |
| Catalog Number Selection | **V2-T1-126** |
| Product Selection | **V2-T1-127** |
| Wiring Diagram | **V2-T1-128** |
| Dimensions | **V2-T1-129** |
| Enclosed NRX Power Circuit Breakers | **V2-T1-130** |
| Flex Center | **V2-T1-134** |


## Power Xpert Enclosed Circuit Breakers

### Product Description

The Power Xpert® enclosed circuit breaker (ECB) with Arcflash Reduction Maintenance System™ is an extension of the arc-flash-risk-reducing solutions currently offered by Eaton. The assembly provides an enclosed circuit breaker with functionality that allows the operator to place the breaker into a maintenance mode, thus reducing the amount of available arc flash incident energy downstream.

The information is taken directly from the National Electrical Code® (NEC) 2023.

### 240.87 Arc Energy Reduction

Where the highest continuous current trip setting for which the actual overcurrent device installed in a circuit breaker is rated or can be adjusted is 1200 amperes or higher, 240.87(A), (B), and (C) shall apply.

**(A) Documentation**
Documentation shall be available to those authorized to design, install, operate, or inspect the installation as to the location of the circuit breaker(s). Documentation shall also be provided to demonstrate that the method chosen to reduce clearing time is set to operate at a value below the available arcing current.

**(B) Method to Reduce Clearing Time**
One of the following means shall be provided and shall be set to operate at less than the available arcing current:

1. Zone selective interlocking
2. Differential relaying
3. Energy-reducing maintenance switching with local status indicator
4. Energy-reducing active arc flash mitigation system
5. An instantaneous trip setting; temporary adjustment of the instantaneous trip setting to achieve arc energy reduction shall not be permitted
6. An instantaneous override
7. An approved equivalent means

Informational Note No. 1: An energy-reducing maintenance switch allows a worker to set a circuit breaker trip unit to "no intentional delay" to reduce the clearing time while the worker is working within an arc-flash boundary as defined in NFPA 70E-2021, Standard for Electrical Safety in the Workplace, and then to set the trip unit back to a normal setting after the potentially hazardous work is complete.

Informational Note No. 2: An energy-reducing active arc-flash mitigation system helps in reducing arcing duration in the electrical distribution system. No change in the circuit breaker or the settings of other devices is required during maintenance when a worker is working within an arc-flash boundary as defined in NFPA 70E-2021, Standard for Electrical Safety in the Workplace.

Informational Note No. 3: An instantaneous trip is a function that causes a circuit breaker to trip with no intentional delay when currents exceed the instantaneous trip setting or current level. If arcing currents are above the instantaneous trip level, the circuit breaker will trip in the minimum possible time.

Informational Note No. 4: See IEEE 1584-2018, IEEE Guide for Performing Arc Flash Hazard Calculations, for guidance in determining arcing current.

## Features

### *Standard Features*

- PXR 20 or 25 trip unit with ALSI protection
- Full range, 55 A to 1200 A
- NEMA Type 1, 3R, 12/3R, 4X
- 600 Vac maximum
- 65 kAIC maximum at 480 Vac
- Additional control relay included to allow users to enable the Arcflash Reduction Maintenance System Maintenance Mode via a remote input signal
- 48 W power supply
- 100 VA CPT
- Arcflash Reduction Maintenance System maintenance mode can be initiated in the following ways:
  - Cover control (including padlockable selector switch and blue LED indication light)
  - Remotely via input signal
  - DIP switch on front of trip unit
- Padlockable in the OFF position ①
- Padlockable enclosure
- Three-position handle (ON/Tripped/OFF)
- Assembly is fully factory wired and ready to go out of the box
- Can be applied on three-phase and single-phase systems ②

***Notes***

① From the factory, the handle can only be locked in the OFF position and can accommodate a maximum of three padlocks. Field modification to drill the shroud can allow locking in the ON position. Check with your local AHJ for requirements. The breaker will trip as usual, even with the handle locked ON.

② For single-phase applications, the customer must wire using the breaker's two outside poles.

### *Optional Features*

- Standard molded case breaker accessories available
- For ground fault applications, ALSIG protection is available
- Surge protective device (200 kA)
- Modifications available such as custom paint, 316-stainless enclosures, lock-on provisions, and more; call the Flex Center at 888-329-9272 for more information

## Standards and Certifications

- UL 489 (File Number E309241)
- cUL® 489 (File Number E309241)
- NEC 240.87 Compliant

Listed

1

## Catalog Number Selection

### Power Xpert Enclosed Circuit Breaker

**EX 3 H A 1 N L3 R - A1S1**

**Power Xpert Enclosed Circuit Breaker**

**EX**

**Ampere Rating/Frame**

- **1** = 125 A trip unit, Frame 3
- **2** = 250 A trip unit, Frame 3
- **3** = 400 A trip unit, Frame 3
- **4** = 600 A trip unit, Frame 3
- **5** = 250 A trip unit, high override, Frame 3
- **6** = 400 A trip unit, high override, Frame 3
- **7** = 800 A trip unit, Frame 4
- **8** = 1200 A trip unit, Frame 5
- **9** = 400 A trip unit, high override, Frame 5 ①

**kAIC Performance at 480 V**

- **S** = Standard (35/50)
- **H** = High (65)

(35 kAIC for Frames 3 and 4, 50 kAIC for Frame 5)

**CPT Voltage**

- **1** = 480 V
- **2** = 208 V
- **3** = 240 V
- **4** = 600 V

**Neutral**

- **N** = With neutral
- **D** = No neutral

**Terminals**

- **L1** = (1) 3–350 (Frame 3, 125 A and 250 A trip units)
- **L2** = (2) 2/0–250 or (1) 2/0–500 (Frame 3, 250 A and 400 A trip units)
- **L3** = (1) 500–750 (Frame 3, 400 A trip unit)
- **L4** = (2) 2–500 (Frame 3, 600 A trip unit)
- **L5** = (3) 3/0–400 (Frame 4, 800 A)
- **L6** = (2) 500–750 (Frame 4, 800 A)
- **L7** = (4) 4/0–500 (Frame 5, 1200 A)
- **L8** = (3) 500–750 (Frame 5, 1200 A)

**Trip Unit**

- **A** = PXR 20 LSI with Arcflash Reduction Maintenance System
- **B** = PXR 20 LSIG with Arcflash Reduction Maintenance System
- **C** = PXR 25 LSI with Arcflash Reduction Maintenance System
- **D** = PXR 25 LSIG with Arcflash Reduction Maintenance System

**Options/Modifications ②**

- **00XS** = 200 kA per phase, Power Xpert SPD
- **000Q** = Omit cover controls (light and selector switch)
- **00A1** = 1NO/1NC auxiliary
- **00A2** = 2NO/2NC auxiliary
- **00S1** = 120 V shunt
- **00S2** = 24 V shunt
- **A1S1** = 1NO/1NC auxiliary, 120 V shunt
- **0316** = 316 stainless steel
- **00WT** = Painted white
- **00OR** = Painted orange
- **0B20** = High load alarm relay
- **00ZG** = Zone selective interlocking
- **0B21** = GF alarm relay, breaker trips
- **0B22** = GF alarm relay, breaker no trip
- **316W** = 316 stainless steel painted white
- **00LO** = Lock on
- **00RL** = Red light instead of blue light (use 10250T197LRP24)

**NEMA Enclosure**

- **G** = NEMA 1
- **R** = NEMA 3R
- **D** = NEMA 12/3R
- **P** = NEMA 4 painted
- **W** = NEMA 4X stainless
- **H** = NEMA 1 100% rated
- **S** = NEMA 3R 100% rated

***Notes***

① Trip unit options A and C only (ground fault protection not available).

② More combinations and options are available. Contact the Switching Device Flex Center at 1-888-329-9272 or FlexSwitches@eaton.com for more information.

## Product Selection

**EX1**

### Short-Circuit Ratings

| Breaker Frame | kAIC Ratings 240 Vac | 480 Vac | 600 Vac | 250 Vdc ① | Catalog Numbers |
|---|---|---|---|---|---|
| PDG3 | 65 | 35 | 18 | 22 | **EX1S, EX2S, EX3S, EX4S, EX5S, EX6S** |
| | 100 | 65 | 35 | 42 | **EX1H, EX2H, EX3H, EX4H, EX5H, EX6H** |
| PDG4 | 65 | 35 | 18 | 22 | **EX7S** |
| | 100 | 65 | 35 | 42 | **EX7H** |
| PDG5 | 85 | 50 | 25 | — | **EX8S, EX9S** |
| | 100 | 65 | 35 | — | **EX8H, EX9H** |

### Neutral Field Kits

| Ampere Rating/ Breaker Frame | Catalog Number Prefix | Trip Unit | Neutral Assembly | Neutral Wire Range |
|---|---|---|---|---|
| 125 A PD3 frame | EX1S, EX1H | ALSI | **DS400NK** | 750 kcmil–1/0<br>(2) 300 kcmil–1/0 |
| | | ALSIG | **ECB400NSK** | 750–1/0 |
| 250 A PD3 frame | EX2S, EX2H<br>EX5S, EX5H (HO) | ALSI | **DS400NK** | 750 kcmil–1/0<br>(2) 300 kcmil–1/0 |
| | | ALSIG | **ECB400NSK** | 750–1/0 |
| 400 A PD3 frame | EX3S, EX3H<br>EX6S, EX6H (HO) | ALSI | **DS400NK** | 750 kcmil–1/0<br>(2) 300 kcmil–1/0 |
| | | ALSIG | **ECB400NSK** | 750–1/0 |
| 600 A PD3 frame | EX4S, EX4H | ALSI | **ECB600NK** | (1) 750–1/0<br>(1) 600–2 |
| | | ALSIG | **ECB600NSK** | (1) 750–1/0<br>(1) 600–2 |
| 800 A PD4 frame | EX7S, EX7H | ALSI | **ECB800NK** | (4) 750–1/0 |
| | | ALSIG | **ECB800NSK** | (4) 750–1/0 |
| 1200 A PD5 frame | EX8S, EX8H | ALSI | **ECB800NK** | (4) 750–1/0 |
| | | ALSIG | **ECB1200NSK** | (4) 750–1/0 |
| 400 A PD5 frame | EX9S, EX9H | ALSI | **ECB800NK** | (4) 750–1/0 |
| | | ALSIG | **ECB800NSK** | (4) 750–1/0 |

***Notes***

① DC ratings available in thermal-magnetic breakers only.

**Note:** (HO) refers to High Override frame.

1

## Wiring Diagram

### ECB with Arcflash Reduction Maintenance System Wiring

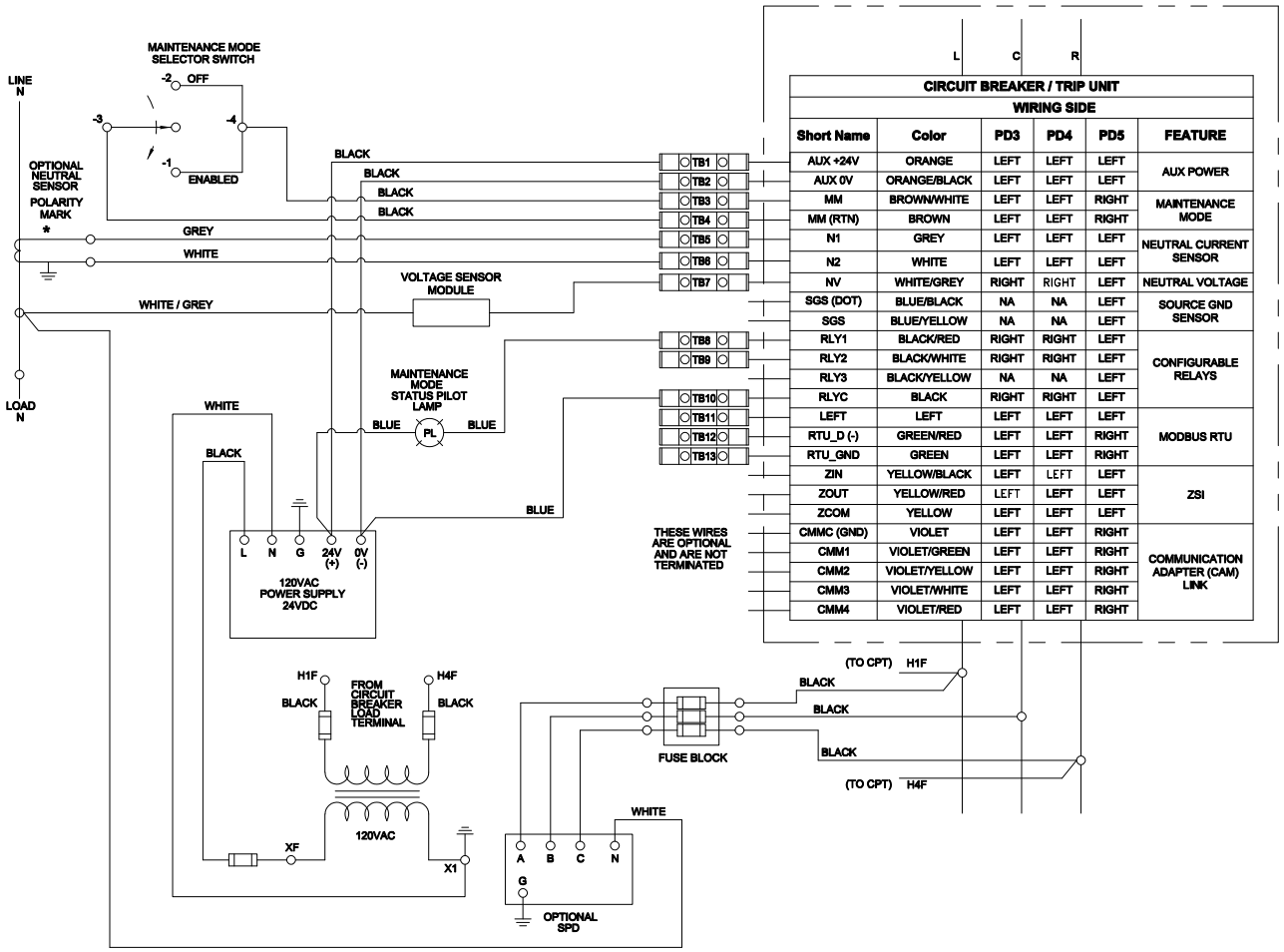


| Short Name | Color | PD3 | PD4 | PD5 | FEATURE |
|---|---|---|---|---|---|
| AUX +24V | ORANGE | LEFT | LEFT | LEFT | AUX POWER |
| AUX 0V | ORANGE/BLACK | LEFT | LEFT | LEFT | |
| MM | BROWN/WHITE | LEFT | LEFT | RIGHT | MAINTENANCE MODE |
| MM (RTN) | BROWN | LEFT | LEFT | RIGHT | |
| N1 | GREY | LEFT | LEFT | LEFT | NEUTRAL CURRENT SENSOR |
| N2 | WHITE | LEFT | LEFT | LEFT | |
| NV | WHITE/GREY | RIGHT | RIGHT | LEFT | NEUTRAL VOLTAGE |
| SGS (DOT) | BLUE/BLACK | NA | NA | LEFT | SOURCE GND SENSOR |
| SGS | BLUE/YELLOW | NA | NA | LEFT | |
| RLY1 | BLACK/RED | RIGHT | RIGHT | LEFT | CONFIGURABLE RELAYS |
| RLY2 | BLACK/WHITE | RIGHT | RIGHT | LEFT | |
| RLY3 | BLACK/YELLOW | NA | NA | LEFT | |
| RLYC | BLACK | RIGHT | RIGHT | LEFT | |
| LEFT | LEFT | LEFT | LEFT | LEFT | MODBUS RTU |
| RTU_D (-) | GREEN/RED | LEFT | LEFT | RIGHT | |
| RTU_GND | GREEN | LEFT | LEFT | RIGHT | |
| ZIN | YELLOW/BLACK | LEFT | LEFT | LEFT | ZSI |
| ZOUT | YELLOW/RED | LEFT | LEFT | LEFT | |
| ZCOM | YELLOW | LEFT | LEFT | LEFT | |
| CMMC (GND) | VIOLET | LEFT | LEFT | RIGHT | COMMUNICATION ADAPTER (CAM) LINK |
| CMM1 | VIOLET/GREEN | LEFT | LEFT | RIGHT | |
| CMM2 | VIOLET/YELLOW | LEFT | LEFT | RIGHT | |
| CMM3 | VIOLET/WHITE | LEFT | LEFT | RIGHT | |
| CMM4 | VIOLET/RED | LEFT | LEFT | RIGHT | |

## Dimensions

Approximate Dimensions in Inches (mm)

### ECB with Arcflash Reduction Maintenance System

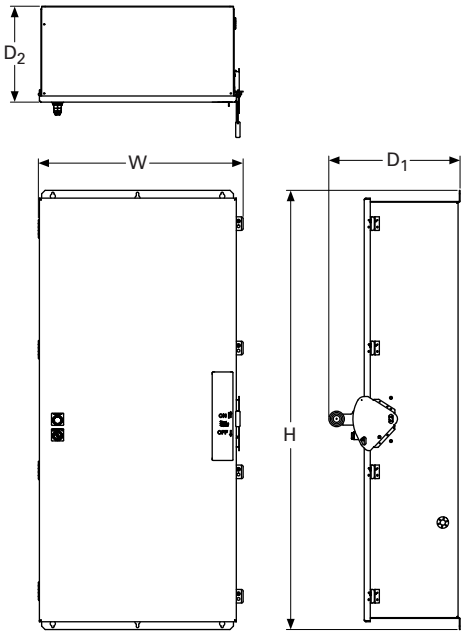


### Dimensions for Continuous Current Ratings 80%

| Breaker Frame | Height (H) | Width (W) | NEMA 1 Depth (D1) | NEMA 1 Depth (D2) | NEMA 3R, 4, 4X, 12/3R Depth (D1) | NEMA 3R, 4, 4X, 12/3R Depth (D2) |
|---|---|---|---|---|---|---|
| PD3 | 53.63 | 26.48 | 9.25 | 7.54 | 12.69 | 7.54 |
| PD4 | 63.49 | 29.62 | 15.53 | 13.81 | 18.93 | 13.81 |
| PD5 | 63.49 | 29.62 | 15.53 | 13.81 | 15.53 | 13.81 |

### Dimensions for Continuous Current Ratings 100%

| Breaker Frame | NEMA 1 Height (H) | NEMA 1 Width (W) | NEMA 1 Depth (D1) | NEMA 1 Depth (D2) | NEMA 3R Height (H) | NEMA 3R Width (W) | NEMA 3R Depth (D1) | NEMA 3R Depth (D2) |
|---|---|---|---|---|---|---|---|---|
| PD3 | 53.63 | 26.48 | 9.25 | 7.54 | 53.63 | 26.48 | 14.96 | 9.82 |
| PD5 | 70.99 | 29.62 | 15.53 | 13.81 | 71.56 | 40.65 | 18.91 | 13.81 |

**Enclosed NRX Power Circuit Breakers**

## Contents


| *Description* | *Page* |
|---|---|
| Enclosed Circuit Breakers—Power Defense | **V2-T1-117** |
| Power Xpert Enclosed Circuit Breakers | **V2-T1-124** |
| Enclosed NRX Power Enclosed Circuit Breakers | |
| Catalog Number Selection | **V2-T1-132** |
| Product Selection | **V2-T1-132** |
| Technical Data and Specifications | **V2-T1-133** |
| Dimensions | **V2-T1-133** |
| Flex Center | **V2-T1-134** |


## Enclosed NRX Power Circuit Breakers

### Product Description

The Enclosed NRX is applicable anywhere remote open/close functionality is needed and is a microgrid ready interconnect device. It aligns with the needs and demands of not only the commercial and industrial markets, but the energy transition and energy storage markets as well.

### Applications

- Engine generators
- Commercial and industrial distribution
- Emergency backup power and isolation applications
- Industrial lock-out/tag-out (LOTO)
- Utility control for load shed/isolation/emergency
- End user control for load shed/isolation/emergency
- Transfer between sources
- Pump station remote operation
- Islanding mode
- Any location where remote operation is required or desired

### Features

***Standard features***

- Remote open/close
- 1200 A frame (1000 A max.)
- 100% rated device
- PXR25 trip unit with LSIG, Modbus. and Arcflash Reduction Maintenance System™
- Maintenance mode cover control
- Safe off feature
- NEC 240.87 compliant
- NEMA Type 1 and NEMA 3R enclosures
- 120 Vac control voltage
- Trip indicator and bell alarm (2 Form C)
- Auxiliary contacts (4 Form C)
- 65 kAIC at 480 Vac

***Optional features***

- Stainless steel (304, 316)
- Custom paint
- Voltage indicators
- Surge protective device
- Remote pendant station

### Standards and Certifications

- UL. listed per UL 489 (File No. E309241)
- cULus listed per CSA. C22.2 No.5 (File No. E309241)

c UL us
Listed

## Enclosed NRX Circuit Breaker With Deadfront Cover

Assembly includes deadfront cover behind the door.

① Cover control (Maintenance Mode)
- Pilot light
- Selector switch (with padlockable cover)

② Viewing window

## Enclosed NRX Circuit Breaker With Deadfront Cover Removed

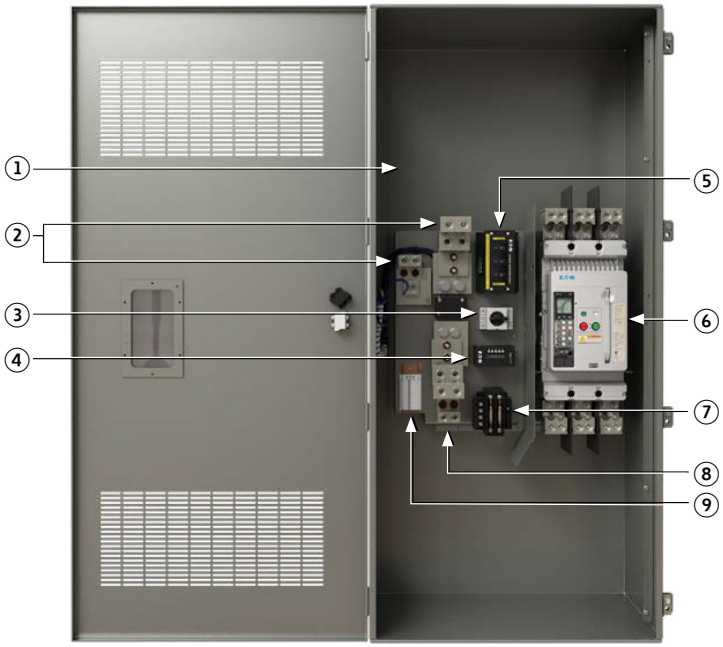


① Internal deadfront
② Bondable neutral
③ Control circuit disconnect
④ 24 Vdc power supply
⑤ NRX PT module
⑥ NRX (PD-NF) breaker ①
- PXR25 trip unit with LSIG, Modbus and Arcflash Reduction Maintenance System
- Motor operator
- Spring release, latch check switch
- 2 shunt trips—4 Form C auxiliary switches

⑦ Control power transformer (120 Vac output)
⑧ Equipment ground
⑨ Terminal blocks

***Note***

① For more information regarding the NRX (PD-NF) insulated case circuit breaker, please visit the Resources tab for the breaker at Eaton.com/ICCB.

1

## Catalog Number Selection

### Enclosed NRX Power Circuit Breaker

**NX 8 A 1 N L3 R - 0SPD**

**Enclosed NRX Breaker**
- **NX**

**Ampere/Fault Current Rating**
- **1** = 200 A, 65 kAIC at 480 V
- **2** = 250 A, 65 kAIC at 480 V
- **3** = 300 A, 65 kAIC at 480 V
- **4** = 400 A, 65 kAIC at 480 V
- **5** = 500 A, 65 kAIC at 480 V
- **6** = 600 A, 65 kAIC at 480 V
- **7** = 800 A, 65 kAIC at 480 V
- **8** = 1000 A, 65 kAIC at 480 V

**Trip Unit**
- **A** = PRX25 LSIG with Modbus and Arcflash Reduction Maintenance System

**System Voltage (CPT Primary Voltage)**
- **1** = 480 V
- **2** = 208 V
- **3** = 240 V
- **4** = 600 V
- **5** = No CPT ①

**Neutral**
- **N** = With neutral
- **D** = No neutral

**Terminals (Include Control Wire Terminal)**
- **L1** = #1–500 kcmil (2 per phase) TA700NB1MCWT
- **L2** = 3/0–400 kcmil (3 per phase) TA1000NB1MCWT
- **L3** = 4/0–500 kcmil (4 per phase) TA1200NB1MCWT
- **L4** = (500–750 kcmil (3 per phase) TA1201NB1MCWT

**NEMA Enclosure**
- **G** = NEMA 1
- **R** = NEMA 3R

**Options/Modifications**
- **Blank** = None
- **0SPD** = Surge protective device (200 kA)
- **00WT** = Painted white
- **0RED** = Painted red
- **00OR** = Painted orange
- **00SS** = 304 stainless steel
- **0316** = 316 stainless steel
- **316W** = 316 stainless steel painted white
- **00RL** = Red light instead of blue light (use 10250T197LRP24)
- **0RPS** = Remote pendant station

***Note***

① Customer supplied 120 V source for control circuit.

## Product Selection

### Catalog Numbers

| | 400 A | 600 A | 800 A | 1000 A |
|---|---|---|---|---|
| Neutral kit | **DS400NK** | **ECB600NK** | **ECB800NK** | **ECB800NK** |
| Neutral sensor kit | **NX1200NSK** | **NX1200NSK** | **NX1200NSK** | **NX1200NSK** |

## Technical Data and Specifications

### Short-Circuit Ratings

| | Maximum Short-Circuit Current RMS Symmetrical | | |
|---|---|---|---|
| | **240 Vac** | **480 Vac** | **600 Vac** |
| kA rating | 100 | 65 | 42 |

## Dimensions

Approximate Dimensions in Inches (mm)

NEMA 1

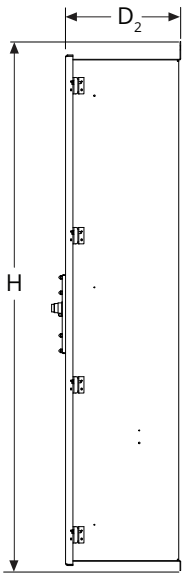


NEMA 1

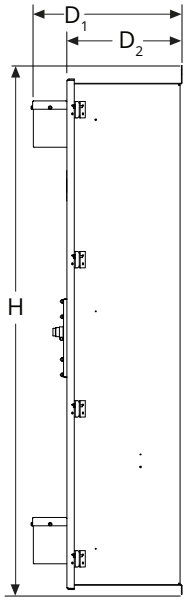


NEMA 3R

### Dimensions and Weights

| | Height (H) | Width (W) | Depth (D1) | Depth (D2) | Weight (lb) |
|---|---|---|---|---|---|
| NEMA 1 | 63.49 | 29.63 | — | 13.82 | 320 |
| NEMA 3R | 63.49 | 29.63 | 17.94 ① | 13.82 | 325 |

***Note***

① D1 measurement represents additional depth due to required venting.

1

## Flex Center

### Introduction

The Switching Devices Flex Center can design and modify safety switches, enclosed circuit breakers and rotary disconnects for needs that are not met by standard products. Solutions can be custom designed for harsh environments, enhanced safety and convenience, and to meet the needs of specific applications.

The Flex Center provides:

- A dedicated and knowledgeable team to meet your needs
- Easy ordering through distributors
- A stocked production facility to provide factory installed modifications including:
  - Special size enclosure
  - Special nameplates
  - Stainless steel flush cover
  - Special paint
  - Lock-on provisions
  - Neutral assemblies—factory installed
  - Equipment ground lugs—factory installed
  - Cover control (pilot lights, pushbuttons, selector switches, etc.)
  - Factory-installed G-Frame breakers
- For application, availability or pricing questions, contact the Safety Switch Flex Center at FlexSwitches@eaton.com

### Satellite Plants

**Atlanta**
7000 Highlands Parkway SE
Suite 102
Smyrna, GA 30082
678.309.4260

**Baltimore**
7451 Coca Cola Drive
Suite C
Hanover, MD 21076
410.796.7777

**Chicago**
230 Windy Point Drive
Glendale Heights, IL 60139
630.260.6303

**Cleveland**
12875 Corporate Drive
Unit E
Parma, OH 44130
216.265.3284

**Dallas**
631 Westport Parkway
Suite 100
Grapevine, TX 76051
817.251.6733

**Denver**
2450 Airport Road
Suite C
Aurora, CO 80011
303.366.2080

**El Paso**
45 Butterfield Circle
Suite C
El Paso, TX 79906
915.881.0259

**Hartford**
40A International Drive
Windsor, CT 06095
860.298.1305

**Houston**
14825 Northwest Freeway
Suite 100
Houston, TX 77040
713.744.7530

**Juarez**
Prolongacion
Hermanos Escobar
#7014, Parque
Industrial Omega
Adicion Oriental Cd.
Juarez, Chihuahua Mexico
32648

**Los Angeles–P&S**
13201 Dahlia Street
Suite 300
Fontana, CA 92337
919.428.8903

**Nashville**
1421 Gould Blvd
Suite C
La Vergne, TN 37086
615.287.3200

**Phoenix**
560 N 54th Street
Suite 1
Chandler, AZ 85226
480.449.4222

**Raleigh**
9400 Globe Center Drive
Suite 121
Morrisville, NC 27560
919.544.7074

**St. Louis**
56 Soccer Park Road
Fenton, MO 63026
636.717.3500

**San Francisco**
20923 Cabot Boulevard
Hayward, CA 94545
510.784.8981

**Seattle**
1604 15th Street SW
Suite 114
Auburn, WA 98001
253.833.5021

**Sumter**
*Main Manufacturing Plant*
845 Corporate Circle
Sumter, SC 29154
803.481.3131

**Westampton**
96 Stemmers Lane
Westampton, NJ 08060
609.835.4230

### Satellite Service Locations

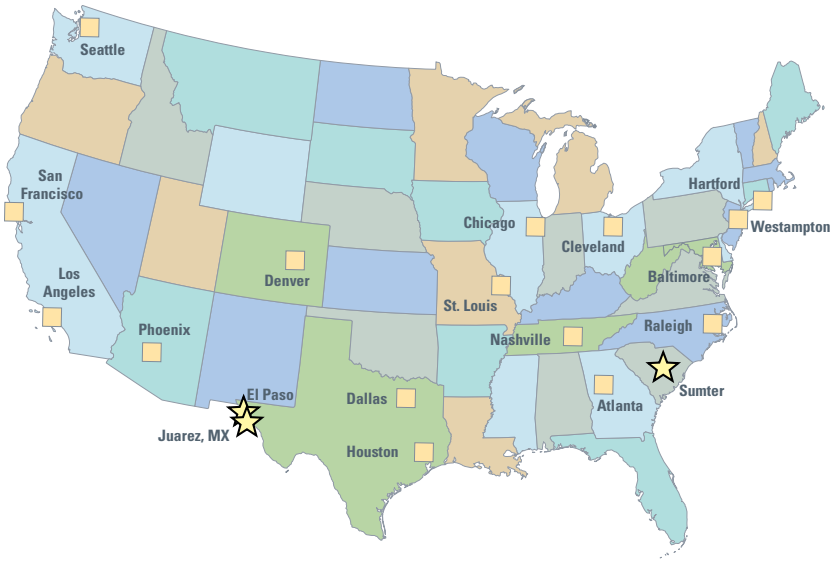

**Enclosed Rotary Disconnects**

## Contents

***Description*** ***Page***

Enclosed Rotary Disconnects
Product Selection . . . . . **V2-T1-136**
Dimensions . . . . . **V2-T1-137**

## Product Overview

Eaton's enclosed rotary disconnect switches allow safe control and disconnect of motor applications. They provide users with the ability to lock directly wired motor loads in the OFF position to comply with OSHA lockout/tagout regulations.

Rotary disconnects can also be used in machine applications that require compact, economical disconnect switches.

## Features, Benefits and Functions

- Padlockable in the OFF position (up to three padlocks) to meet OSHA lockout requirements
- Available in 16–80 A ratings
- 600 Vac, three- and four-pole non-fusible device
- Rated for making and breaking loads
- Accepts auxiliary contacts; capability to signal PLC controllers
- Ground lug connection provided
- Possibility of adding one power pole and one auxiliary contact
- NEMA Type 1, 3R, 12, 4, 4X

Open rotary disconnects can be found in Volume 5, Tab 3 titled: NEMA Manual Starters.

## Standards and Certifications

- Meets NEC® Article 430 requirements for a separate disconnect means within sight of all motor loads
- UL® listed under Section 508
- UL listed File No. E165150
- CSA® listed under 22.2 No. 14, File 162136

Listed

1

## Product Selection

### Enclosed Rotary Non-Fusible

| Ampere Rating | Maximum Horsepower Ratings Three-Phase AC 208 V | 240 V | 480 V | 600 V | NEMA 1 ① Enclosure Indoor Catalog Number | NEMA 12/3R ①② Enclosure Dust-Tight/ Rainproof Catalog Number | NEMA 4X ① Enclosure Corrosion-Resistant, Stainless Steel Catalog Number | NEMA 4X ① Enclosure Corrosion-Resistant, Non-Metallic Catalog Number | NEMA 4X Enclosure Polycarbonate-Non-Metallic Catalog Number |
|---|---|---|---|---|---|---|---|---|---|
| **Three-Pole, 600 Vac** | | | | | | | | | |
| 16 | 3 | 5 | 10 | 10 | **ER53016UG** | **ER53016UD** | **ER53016UW** | **ER53016UX** | — |
| 25 | 7-1/2 | 7-1/2 | 15 | 20 | **ER53025UG** | **ER53025UD** | **ER53025UW** | **ER53025UX** | — |
| 30 | 7-1/2 | 7-1/2 | 15 | 20 | **ER53030UG** | **ER53030UD** | **ER53030UW** | **ER53030UX** | **ER53030UPGB** ③④ |
| 40 | 7-1/2 | 7-1/2 | 20 | 25 | **ER53040UG** | **ER53040UD** | **ER53040UW** | **ER53040UX** | — |
| 60 | 15 | 15 | 30 | 30 | **ER53060UG** | **ER53060UD** | **ER53060UW** | **ER53060UX** | **ER53060UPGB** ③④ |
| 80 | 15 | 20 | 40 | 40 | **ER53080UG** | **ER53080UD** | **ER53080UW** | **ER53080UX** | — |
| **Four-Pole, 600 Vac** | | | | | | | | | |
| 16 | 3 | 5 | 10 | 10 | **ER54016UG** | **ER54016UD** | **ER54016UW** | **ER54016UX** | — |
| 25 | 7-1/2 | 7-1/2 | 15 | 20 | **ER54025UG** | **ER54025UD** | **ER54025UW** | **ER54025UX** | — |
| 30 | 7-1/2 | 7-1/2 | 20 | 25 | **ER54030UG** | **ER54030UD** | **ER54030UW** | **ER54030UX** | — |
| 40 | 7-1/2 | 7-1/2 | 20 | 25 | **ER54040UG** | **ER54040UD** | **ER54040UW** | **ER54040UX** | — |

### Accessories for Enclosed Rotary Disconnects ⑤⑥

| Disconnect Ampere Rating | Switched Fourth Pole | Unswitched Neutral Pole | Auxiliary Contacts (Choose one) | Terminal Shrouds |
|---|---|---|---|---|
| 16 | **S4PR516** | **UNMR5A** | 1NO + 1NC **AC1NONC** | Single-pole **TS1R5A** |
| 25 | **S4PR525** | | | |
| 30 | **S4PR530** | | 2NO **AC2NO** | Three-pole **TS3R5A** |
| 40 | **S4PR540** | | | |
| 60 | **S4PR560** | **UNMR5B** | | Single-pole **TS1R5B** |
| 80 | **S4PR580** | | | Three-pole **TS3R5B** |

***Notes***

① For CSA listed switches, add prefix letter "C" to the front of the catalog number.
② NEMA 12/3R enclosures (16–80 A) can be field modified to meet NEMA Type 3R rainproof requirements when a factory-provided drain hole is opened.
③ GB suffix = Gray cover, Black handle. GR suffix = Gray cover, Red handle. YR suffix = Yellow cover, Red handle.
④ cULus only.
⑤ Ordered and shipped as separate components—not integral to enclosed device.
⑥ Enclosed disconnects can accept one power pole, neutral or up to two auxiliary contacts (one mounted on either side of switch).

Contact the Safety Switch Flex Center at FlexSwitches@eaton.com for factory-installed accessories or other special modifications.

## Dimensions

Approximate Dimensions in Inches (mm)

### NEMA Type 1 (16–40 A)

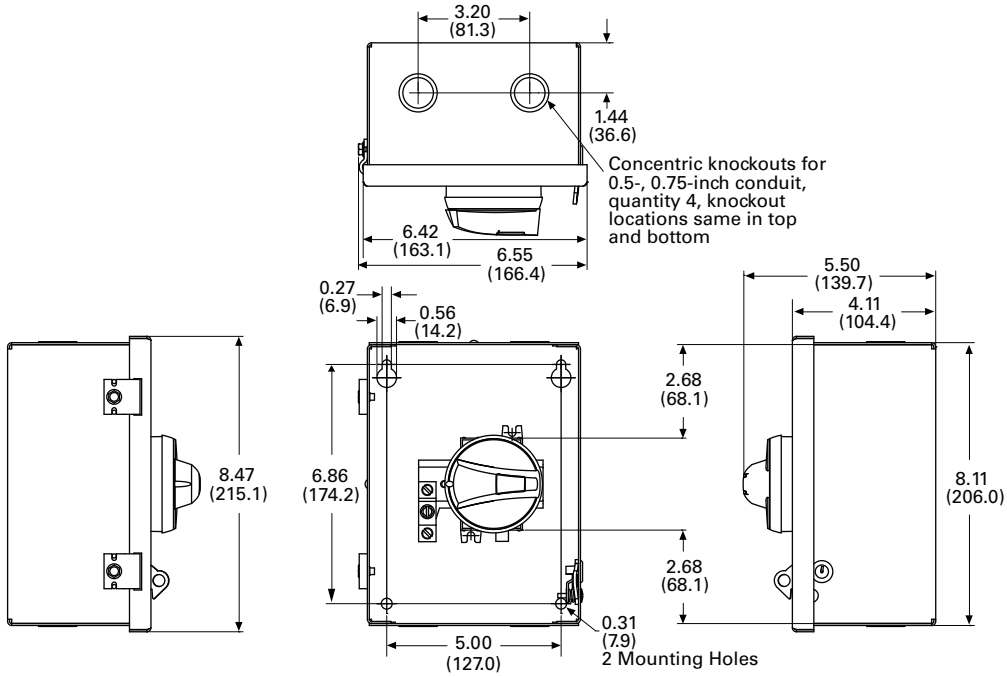


**Note:**
Wire range of switch lugs for 16–25 A is #6–#10 copper, and for 30–40 A is #8–#14.
Wire range of ground lugs is #2–#14 copper or aluminum.

### NEMA Type 1 (60–80 A)

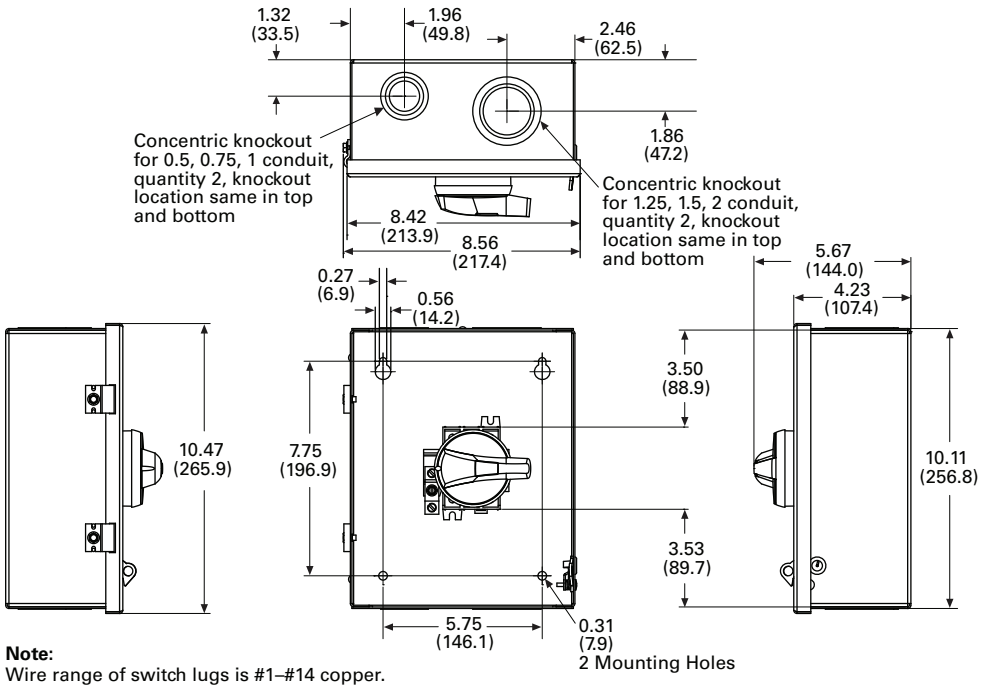


**Note:**
Wire range of switch lugs is #1–#14 copper.
Wire range of ground lugs is #2–#14 copper or aluminum.

1

Approximate Dimensions in Inches (mm)

## NEMA Type 12/3R (16–40 A)

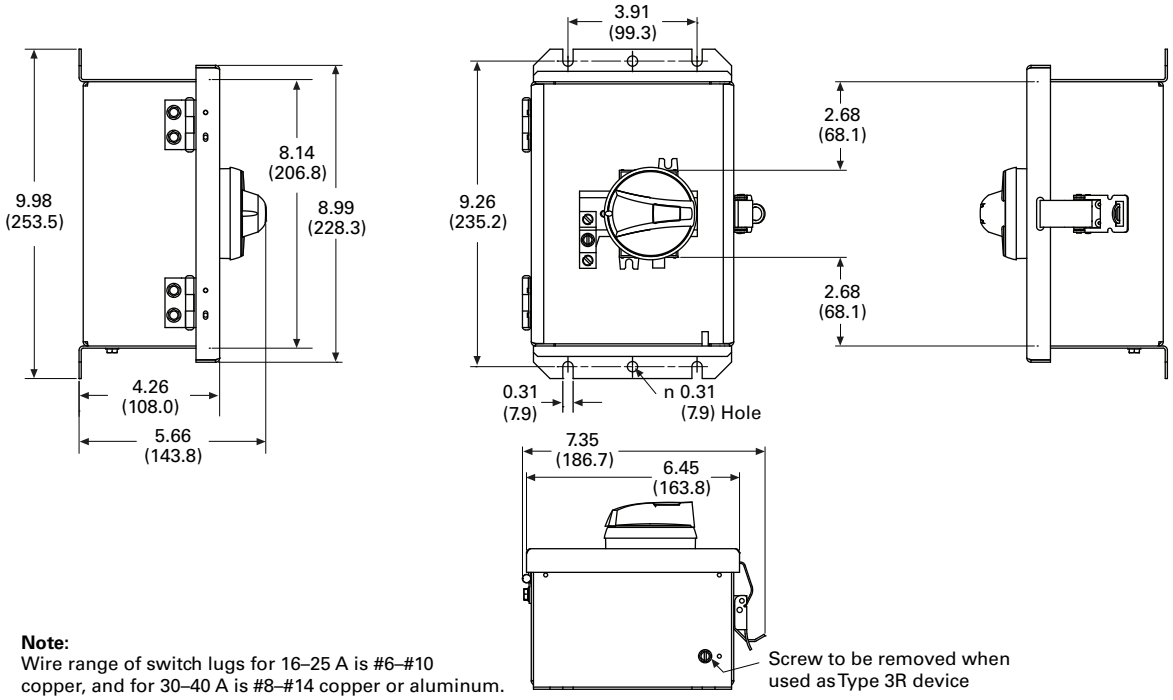


**Note:**
Wire range of switch lugs for 16–25 A is #6–#10 copper, and for 30–40 A is #8–#14 copper or aluminum.

## NEMA Type 12/3R (60–80 A)

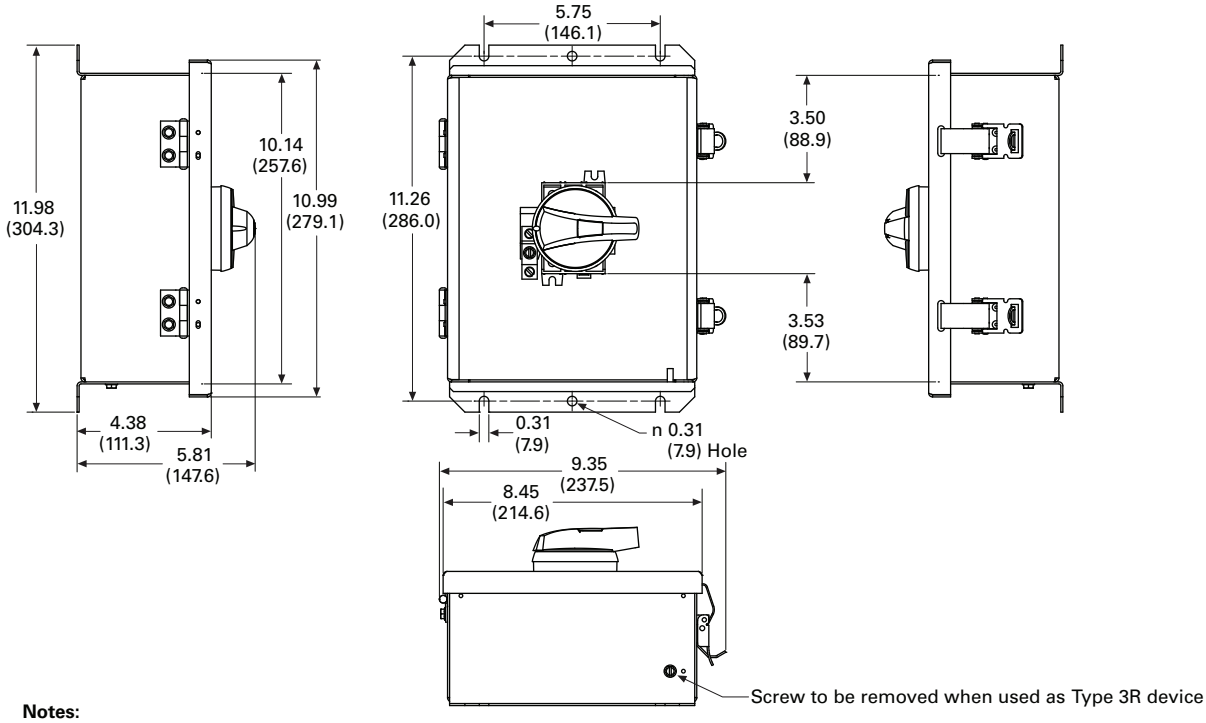


**Notes:**
Wire range of switch lugs is #1–#14 copper.
Wire range of ground lugs is #2–#14 copper or aluminum.

Approximate Dimensions in Inches (mm)

## NEMA Type 4X Stainless (16–40 A)

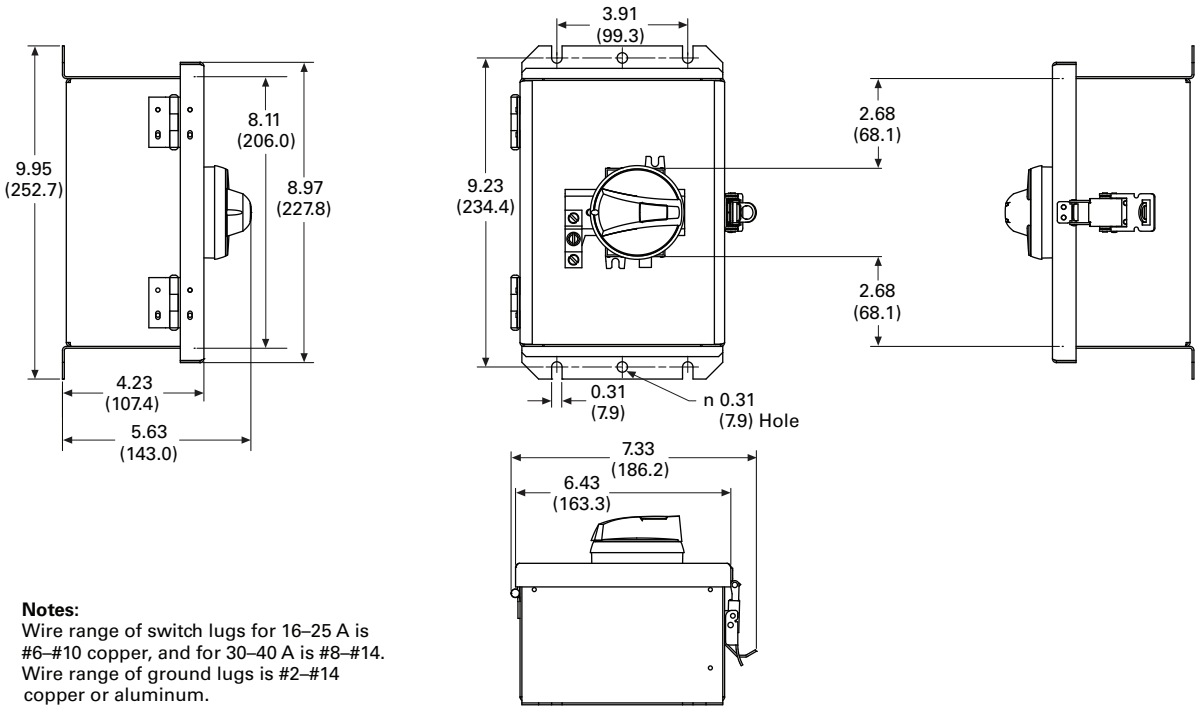


**Notes:**
Wire range of switch lugs for 16–25 A is #6–#10 copper, and for 30–40 A is #8–#14. Wire range of ground lugs is #2–#14 copper or aluminum.

## NEMA Type 4X Stainless (60–80 A)

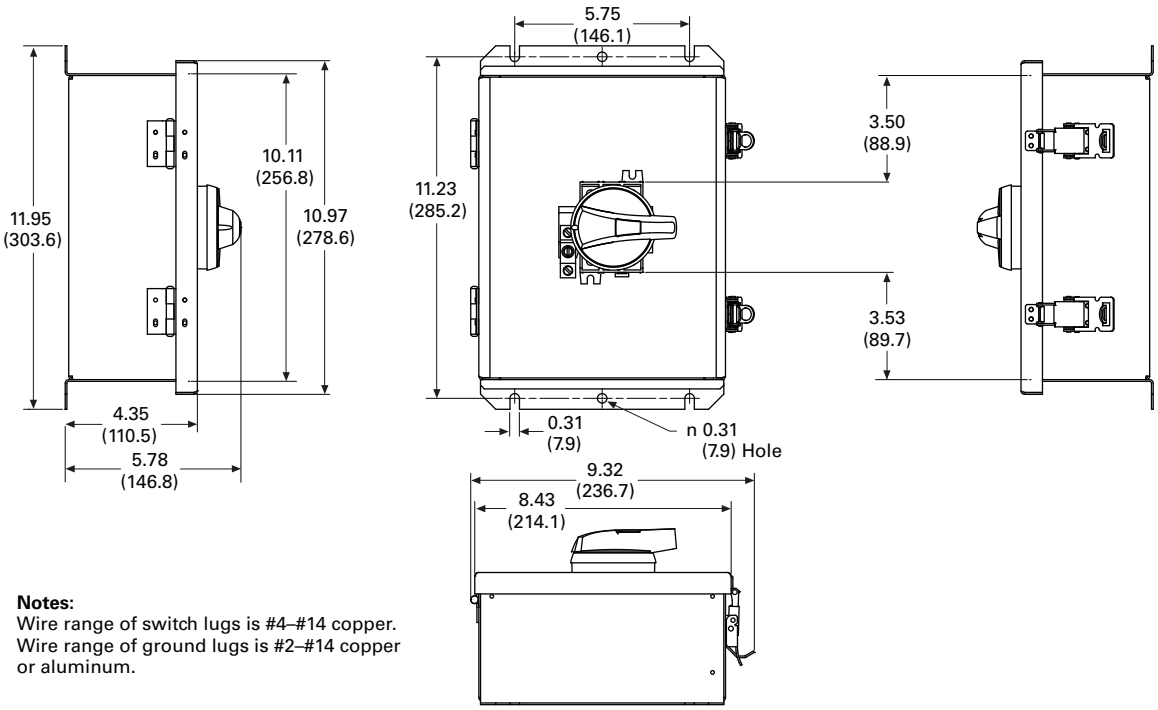


**Notes:**
Wire range of switch lugs is #4–#14 copper. Wire range of ground lugs is #2–#14 copper or aluminum.

1

Approximate Dimensions in Inches (mm)

## NEMA Type 4X Thermoset Polyester (16–40 A)

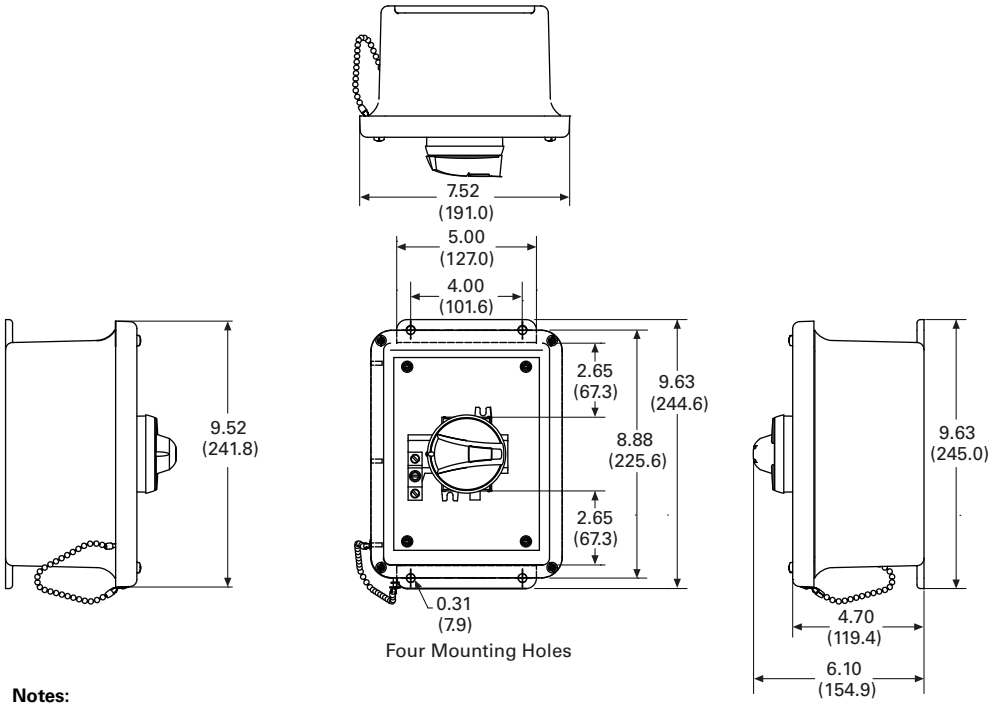


**Notes:**
Wire range of switch lugs for 16–25 A is #6–#10 copper, and for 30–40 A is #8–#14.
Wire range of ground lugs is #2–#14 copper or aluminum.

## NEMA Type 4X Thermoset Polyester (60–80 A)

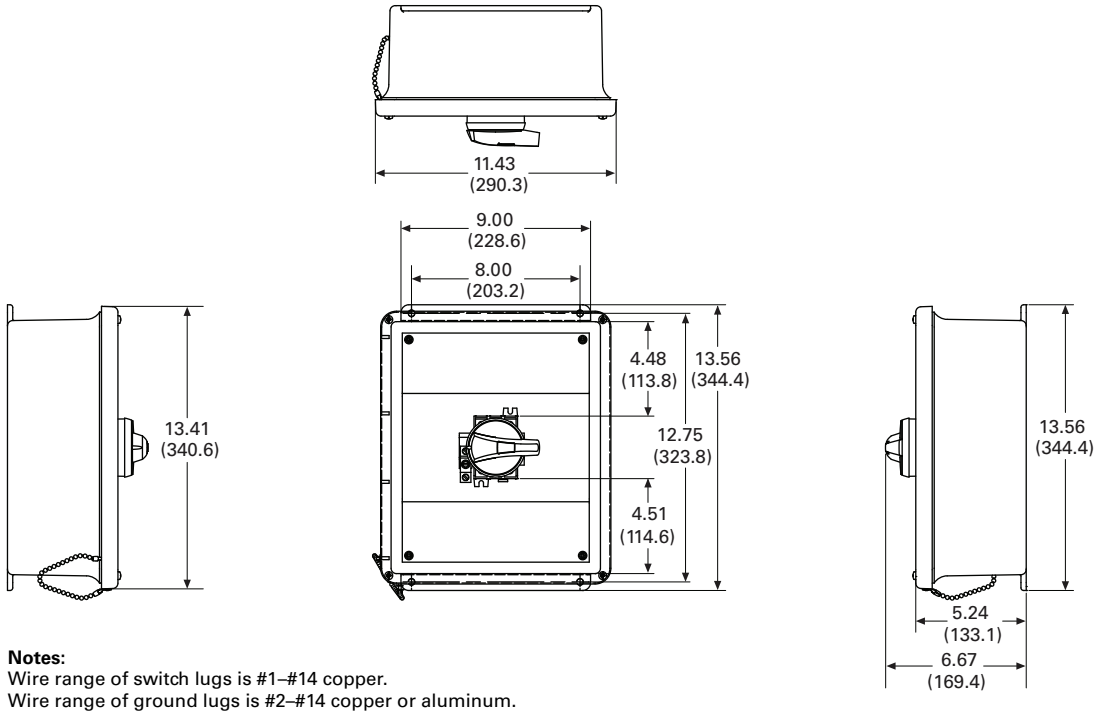


**Notes:**
Wire range of switch lugs is #1–#14 copper.
Wire range of ground lugs is #2–#14 copper or aluminum.

Approximate Dimensions in Inches (mm)

### NEMA Type 4X—Polycarbonate (30 A)

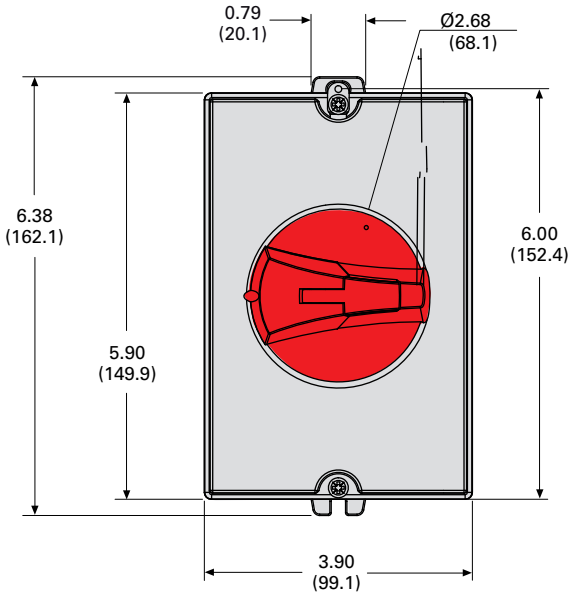


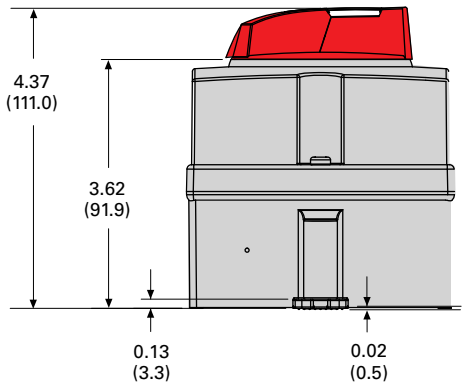

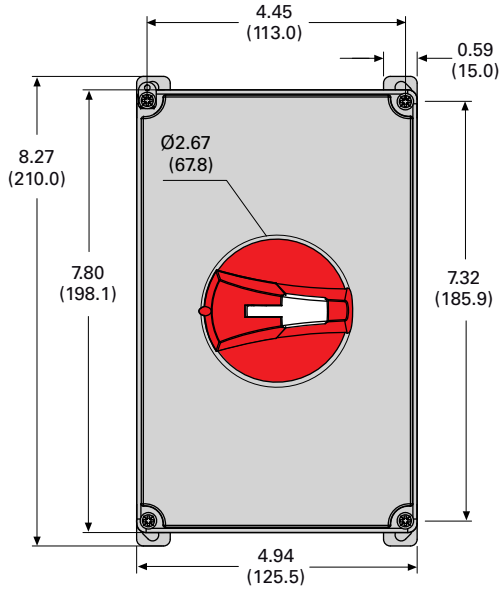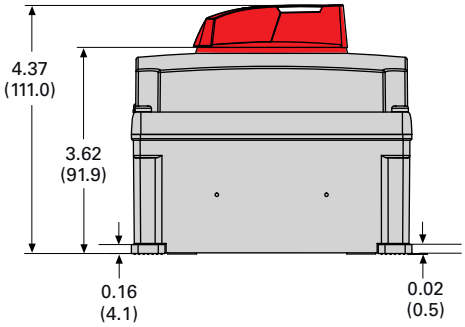
### NEMA Type 4X—Polycarbonate (60 A)